PART III. WATER DISTRIBUTION SYSTEM STANDARD DETAILS

CONTENTS

DRAWING	DESCRIPTION
D-1	Subdivision Utility Location
D-2	Pavement Patch Detail
D-3	Standard Trench Detail
D-4	Dead End Valve
D-5	Thrust Block
D-6	Tapping Sleeve and Tapping Valve
D-7	Connection Detail
D-8	Backtap Installation
D-9	Air Release Valve
D-10	Fire Hydrant Assembly
D-11	Service Connections
D-11A	5/8” x 3/4” Water Meter Setting
D-12	Sampling Station
D-13	Typical Road Bore and Casing Detail
D-14	Typical Cul-de-Sac Detail
D-15	Silt Fence Detail
D-16	Stone Check Dam Detail
D-17	Minor Creek Crossing
D-18	Major Creek Crossing
D-19	Gate Valve
D-20	Valve Marker
D-21	Domestic Water Meter - Traffic Bearing Vault
D-22	Double Check Detector Assembly - Traffic Bearing Vault
D-23	Reduced Pressure Zone Backflow Preventer - 1 1/2” & 2”

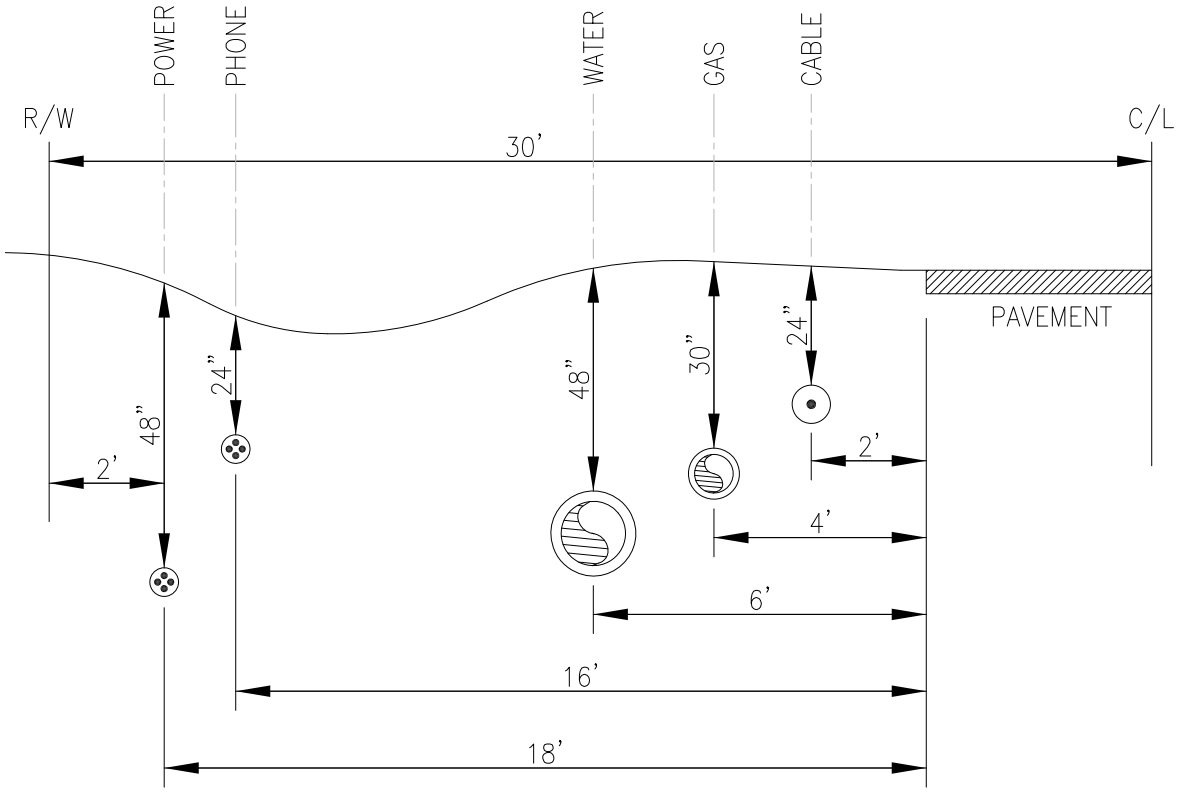

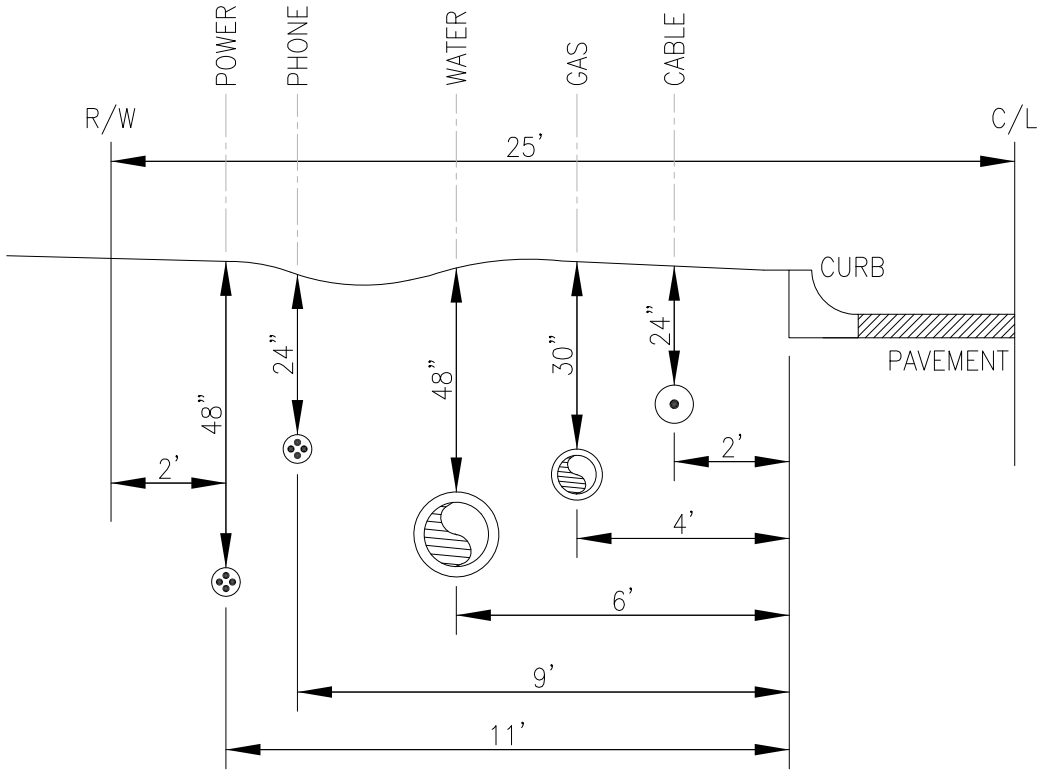

NOTE:

1. ON ALL ROADS OUTSIDE OF THE SUBDIVISION, WATER LINE SHALL BE LOCATED 0'-5' FROM THE EDGE OF THE RIGHT-OF-WAY.

SUBDIVISION UTILITY LOCATION	
WALTON COUNTY GEORGIA ESTABLISHED 1818	STANDARD DETAIL – WATER
SCALE: NONE	D-1
DATE: 08-25-17	

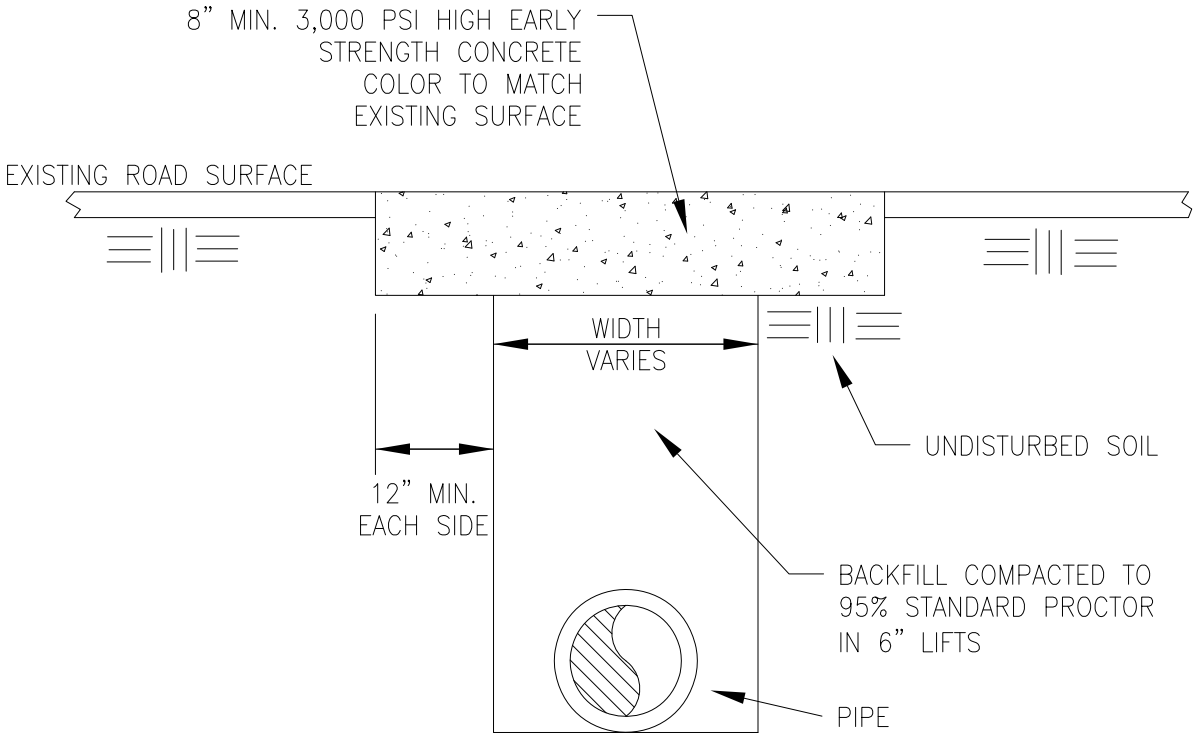

SUBDIVISION, COUNTY OR D.O.T. ROAD
CUT AND PATCH

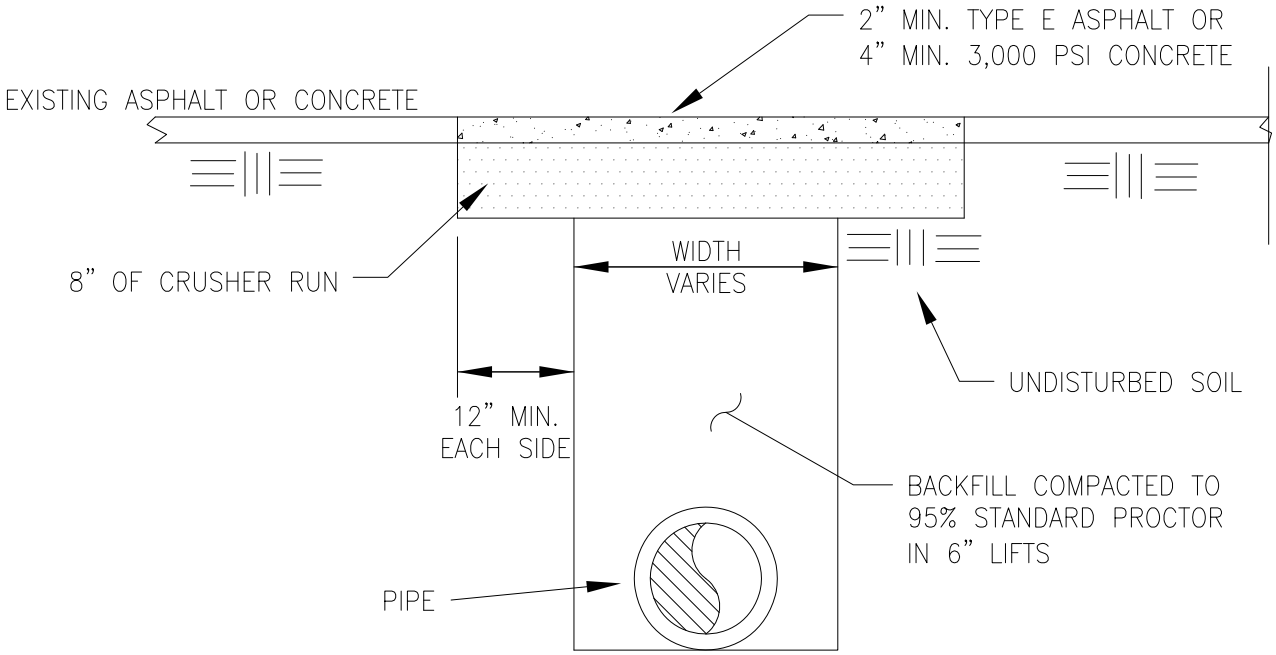

ASPHALT AND CONCRETE DRIVEWAY
CUT AND PATCH

PAVEMENT PATCH DETAIL	
WALTON COUNTY GEORGIA ESTABLISHED 1818	STANDARD DETAIL – WATER
	SCALE: NONE
	DATE: 08-25-17
	D-2

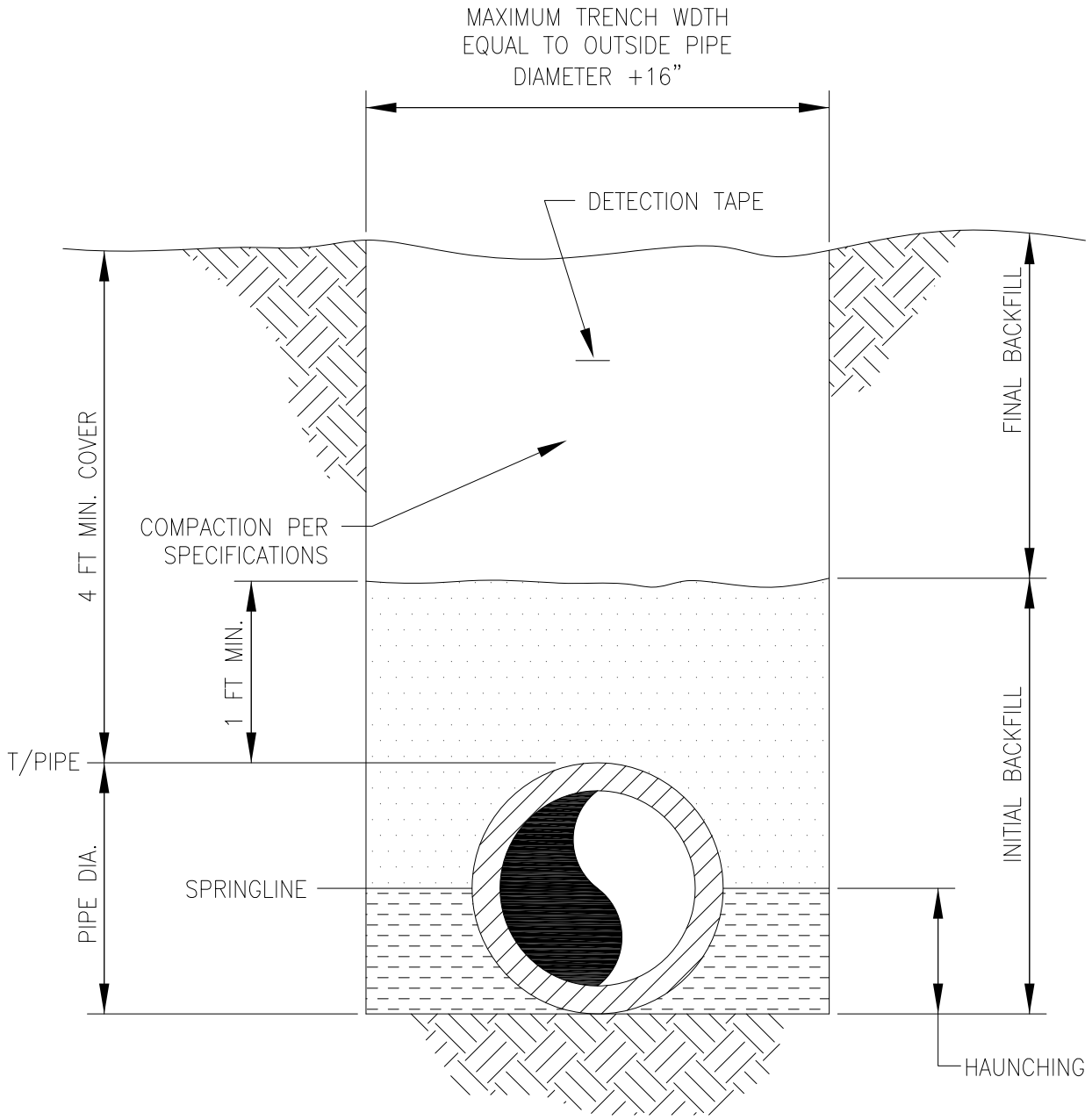

NOTE:

1. INITIAL BACKFILL SHALL BE FREE OF ALL ROCKS, DIRT CLOGS, ROOTS, STICKS AND ALL OTHER DEBRIS.

STANDARD TRENCH DETAIL	
STANDARD DETAIL – WATER	
SCALE: NONE	D–3
DATE: 08–25–17	

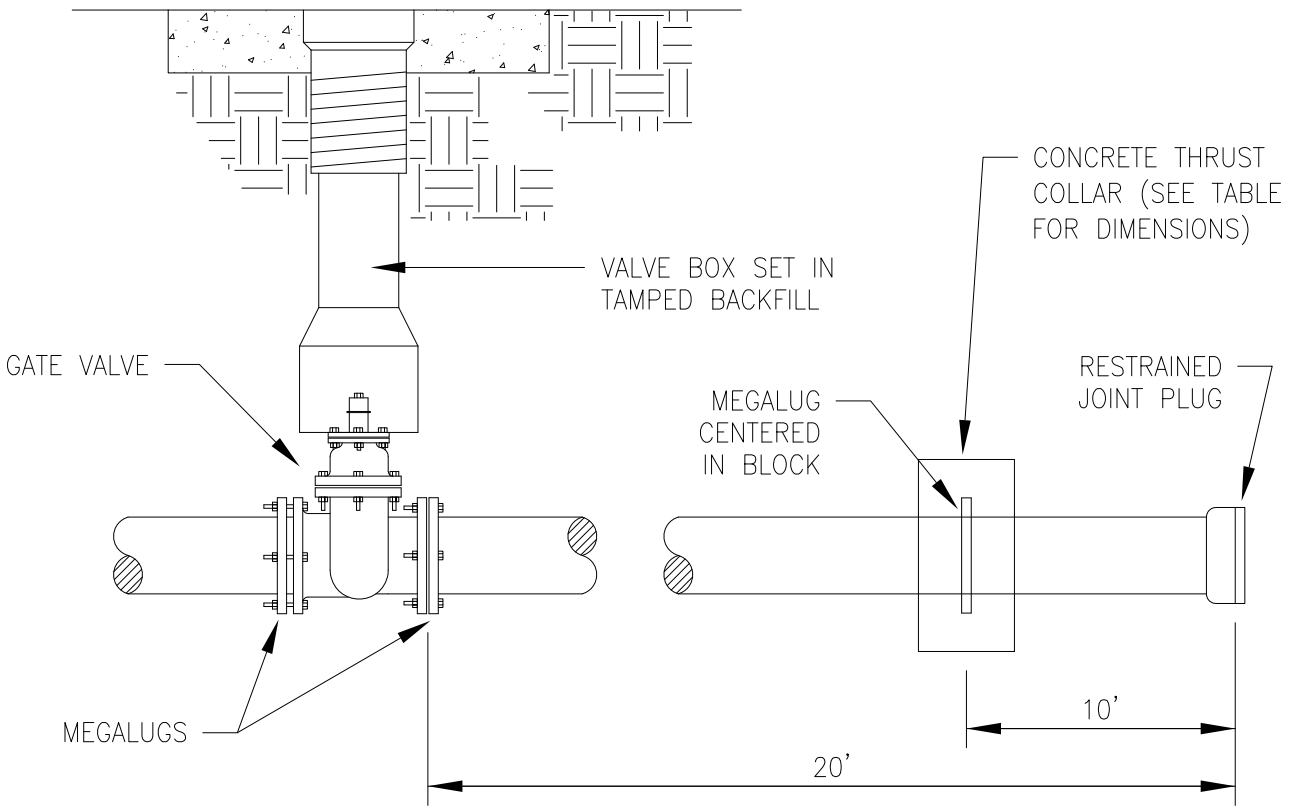

THRUST COLLAR MINIMUM DIMENSIONS

PIPE SIZE	A	B	C
6"	3'-0"	3'-0"	3'-0"
8"	3'-6"	3'-0"	3'-0"
10"	4'-0"	3'-0"	4'-0"
12"	5'-0"	3'-0"	4'-6"
14"	5'-6"	3'-0"	5'-6"
16"	6'-6"	3'-0"	6'-0"

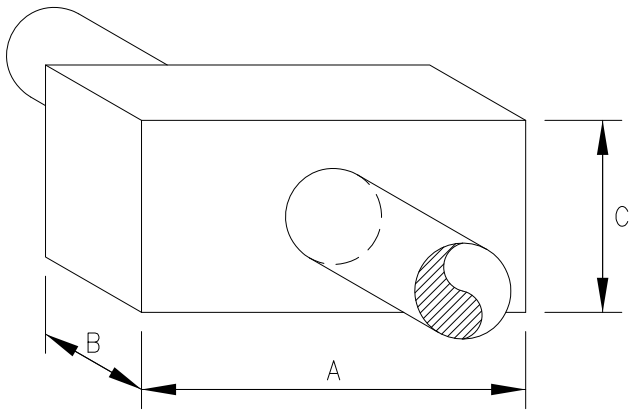

NOTES:

1. CONCRETE FOR THRUST COLLARS SHALL BE CLASS B.
2. MINIMUM DIMENSION ARE BASED ON TEST PRESSURE OF 250 PSI AND SOIL BEARING CAPACITY OF 2000 PSF. SOIL CONDITIONS SHALL BE CONFIRMED IN FIELD AND THRUST COLLAR SIZED INCREASED, AS NECESSARY.
3. WHERE POSSIBLE, CONCRETE SHALL BE POURED AGAINST UNDISTURBED SOIL. WHERE NOT POSSIBLE, FILL BETWEEN BEARING SURFACE AND UNDISTURBED SOIL SHALL BE COMPACTED TO 90% STANDARD PROCTOR DENSITY.
4. THRUST COLLARS FOR WATER MAINS LARGER THAN 16" SHALL BE CALCULATED BY DESIGNING ENGINEER FOR APPROVAL BY THE AUTHORITY.
5. INSTALL GATE VALVE AND ACCESSORIES PER STANDARD DETAIL D-19.

DEAD END VALVE	
WALTON COUNTY GEORGIA ESTABLISHED 1818	STANDARD DETAIL – WATER
SCALE: NONE	D-4
DATE: 08-25-17	

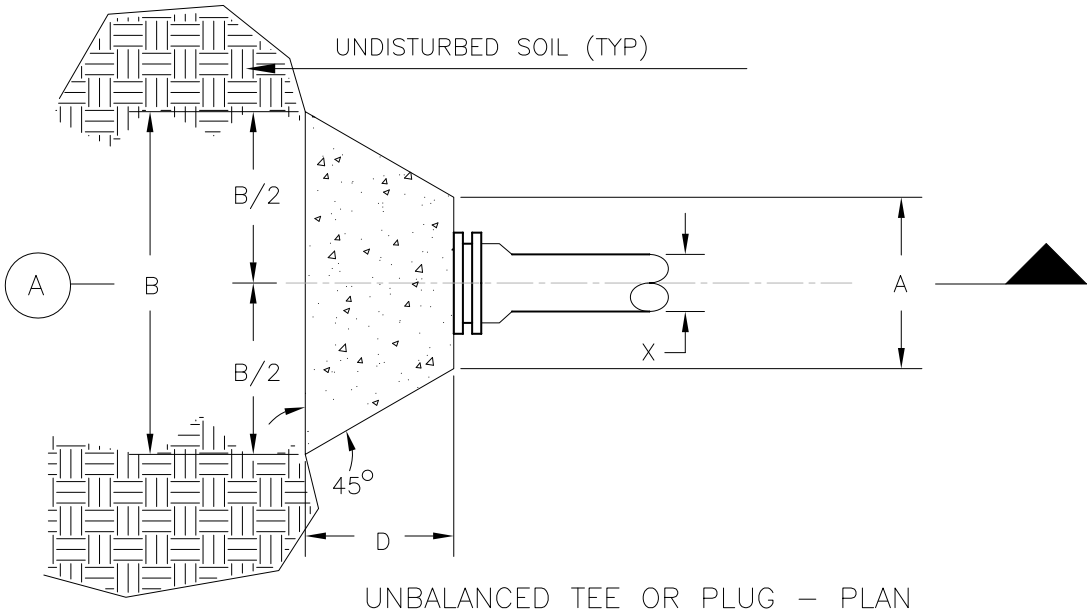

UNBALANCED TEE OR PLUG – PLAN

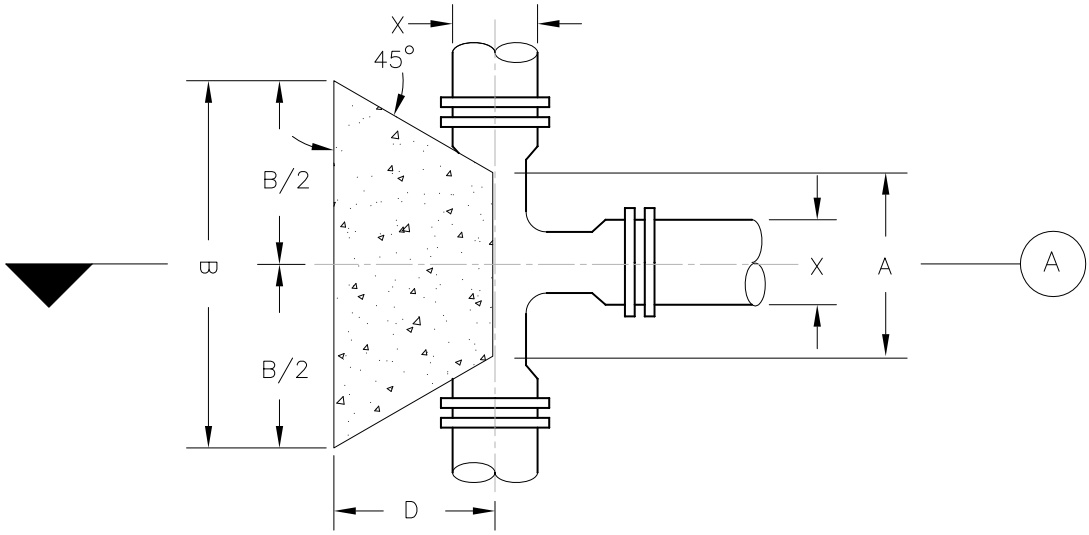

TEE – PLAN

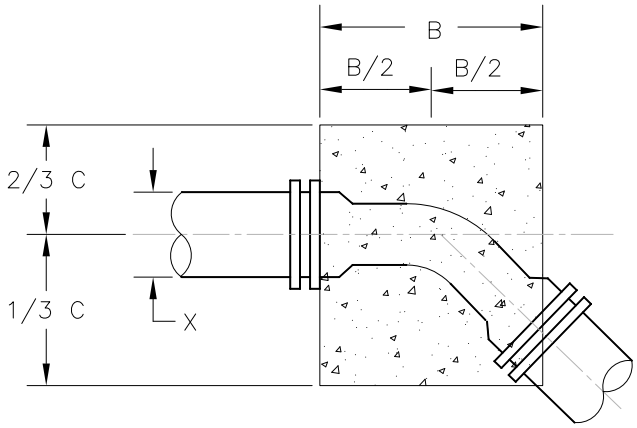

VERTICAL BEND – ELEVATION

SHEET 1 OF 3

THRUST BLOCK	
STANDARD DETAIL – WATER	
SCALE: NONE	D–5
DATE: 08–25–17	

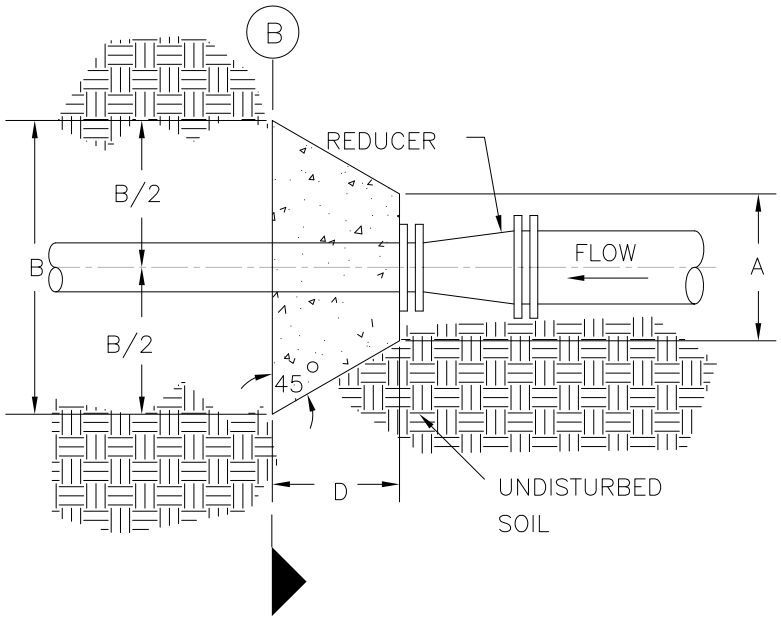

REDUCER – PLAN

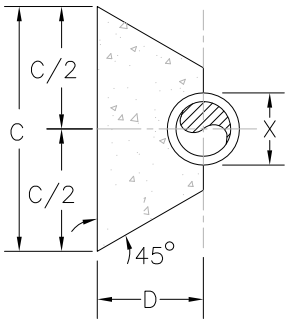

SECTION A

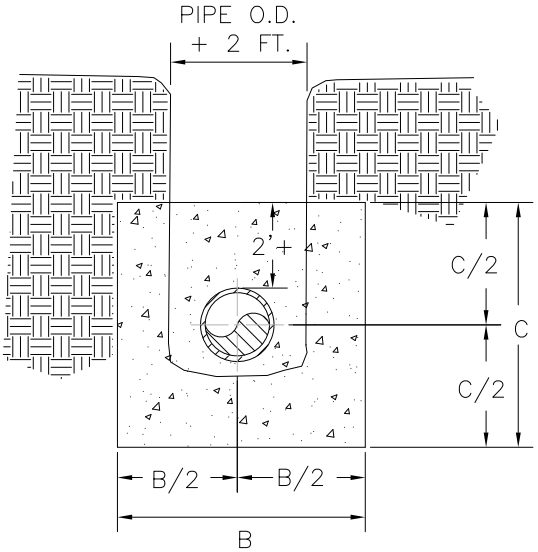

SECTION B

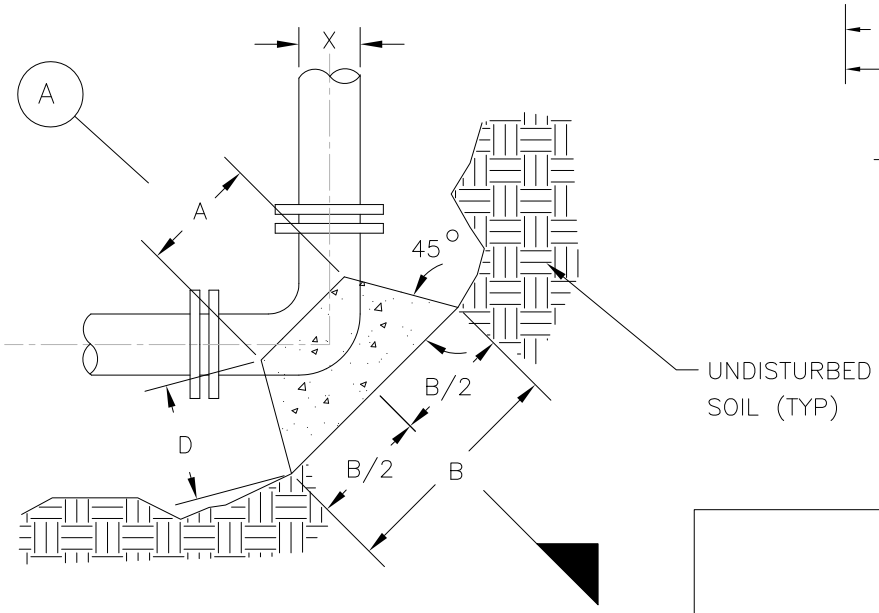

HORIZONTAL BEND – PLAN

SHEET 2 OF 3

THRUST BLOCK

STANDARD DETAIL – WATER

SCALE: NONE

DATE: 08-25-17

D-5

Pipe Size X	A	B	C	D
90 DEGREE BEND				
16"	1'-9"	5'-0"	5'-0"	3'-3"
14"	1'-7"	4'-0"	4'-0"	2'-6"
12"	1'-4"	3'-6"	3'-6"	2'-3"
10"	1'-3"	3'-0"	3'-0"	2'-0"
8"	1'-0"	2'-6"	2'-6"	1'-9"
6"	0'-11"	1'-9"	1'-9"	1'-6"
45 DEGREE BEND				
16"	1'-7"	3'-6"	3'-6"	2'-3"
14"	1'-3"	3'-0"	3'-0"	2'-0"
12"	1'-3"	3'-0"	2'-6"	2'-0"
10"	1'-3"	2'-6"	2'-0"	1'-9"
8"	1'-0"	1'-9"	1'-9"	1'-3"
6"	0'-11"	1'-6"	1'-6"	1'-0"

Pipe Size X	A	B	C	D
11 1/4 DEGREE BEND				
16"	1'-3"	1'-9"	1'-9"	1'-0"
14"	1'-2"	1'-6"	1'-6"	1'-0"
12"	1'-2"	1'-6"	1'-6"	1'-0"
10"	1'-0"	1'-3"	1'-3"	1'-0"
8"	0'-10"	1'-0"	1'-0"	1'-0"
6"	0'-9"	1'-0"	1'-0"	1'-0"
22 1/2 DEGREE BEND				
16"	1'-5"	2'-6"	2'-6"	1'-3"
14"	1'-4"	2'-3"	2'-3"	1'-0"
12"	1'-2"	2'-0"	2'-0"	1'-0"
10"	1'-0"	1'-9"	1'-9"	1'-0"
8"	0'-10"	1'-6"	1'-6"	1'-0"
6"	0'-9"	1'-3"	1'-3"	1'-0"

Pipe Size X	A	B	C	D
Unbalanced Tee & Plug				
16"	2'-1"	4'-0"	4'-0"	1'-9"
14"	1'-11"	3'-6"	3'-6"	1'-6"
12"	1'-8"	3'-0"	3'-0"	1'-3"
10"	1'-6"	2'-6"	2'-6"	1'-0"
8"	1'-4"	2'-0"	2'-0"	1'-0"
6"	1'-2"	1'-6"	1'-6"	1'-0"
Tee				
16"	1'-6"	4'-0"	4'-0"	2'-6"
14"	1'-6"	3'-6"	3'-6"	2'-3"
12"	1'-3"	3'-0"	3'-0"	2'-0"
10"	1'-3"	2'-6"	2'-6"	1'-6"
8"	1'-0"	2'-0"	2'-0"	1'-6"
6"	0'-11"	1'-6"	1'-6"	1'-3"

NOTES:

1. ALL BOLTS AND GLANDS SHALL BE WRAPPED IN 4 MIL POLYETHYLENE BEFORE POURING CONCRETE.
2. CONCRETE SHALL BE POURED AGAINST UNDISTURBED SOIL.
3. CONCRETE SHALL HAVE 3,000 PSI MIN. COMPRESSIVE STRENGTH, TYPE II CONCRETE IN ACCORDANCE WITH ASTM C150; "SACKCRETE" WILL NOT BE ALLOWED.
4. THRUST BLOCK SIZING BASED ON MAXIMUM LINE PRESSURE OF 150 PSI AND MINIMUM SOIL BEARING PRESSURE OF 2,000 PSF. CONTRACTOR SHALL SUBMIT CALCULATIONS FOR THRUST BLOCK SIZING WHERE ACTUAL CONDITIONS ARE NOT WITHIN THESE PRESSURE CONDITIONS.

THRUST BLOCK

WALTON COUNTY GEORGIA ESTABLISHED 1818

STANDARD DETAIL – WATER

SCALE: NONE

DATE: 08-25-17

D-5

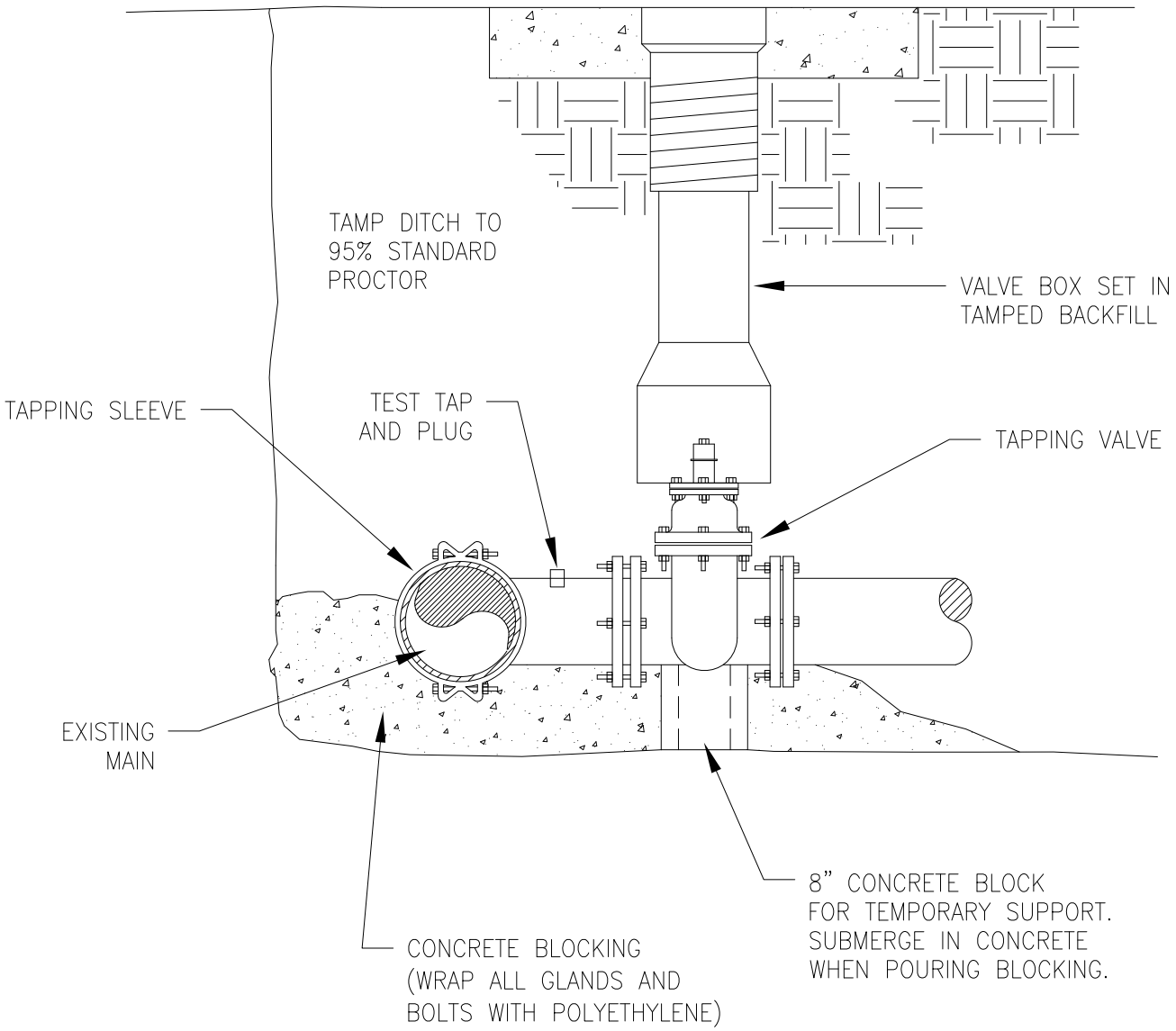

NOTES:

1. INSTALL GATE VALVE AND ACCESSORIES PER STANDARD DETAIL D-19.

TAPPING SLEEVE AND TAPPING VALVE	
WALTON COUNTY GEORGIA ESTABLISHED 1818	STANDARD DETAIL – WATER
SCALE: NONE	D-6
DATE: 08-25-17	

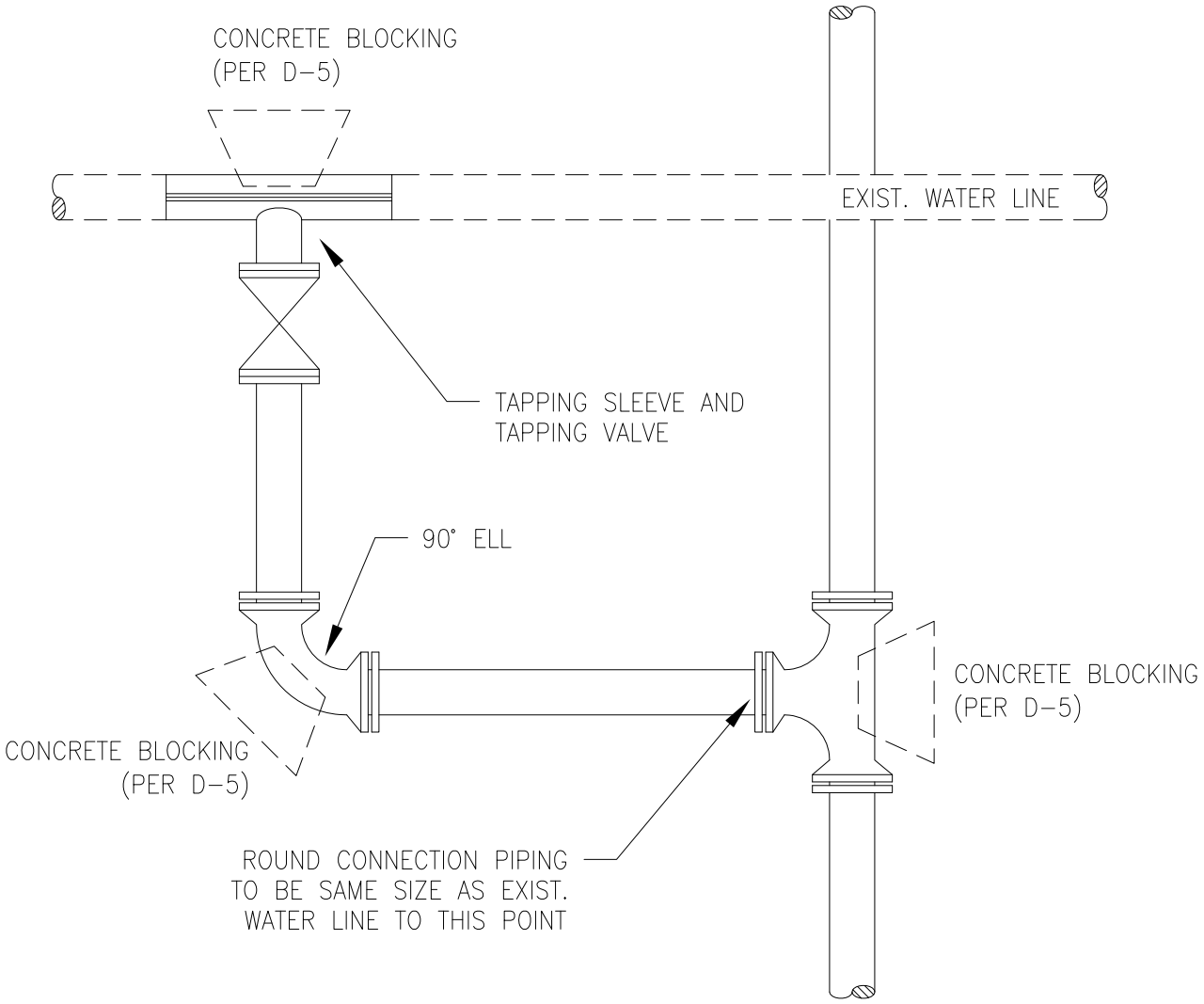

NOTE:

1. CONNECTION BETWEEN TAPPING SLEEVE AND TEE MUST BE FULLY RODDED TOGETHER.

CONNECTION DETAIL	
STANDARD DETAIL – WATER	
SCALE: NONE	D-7
DATE: 08-25-17	

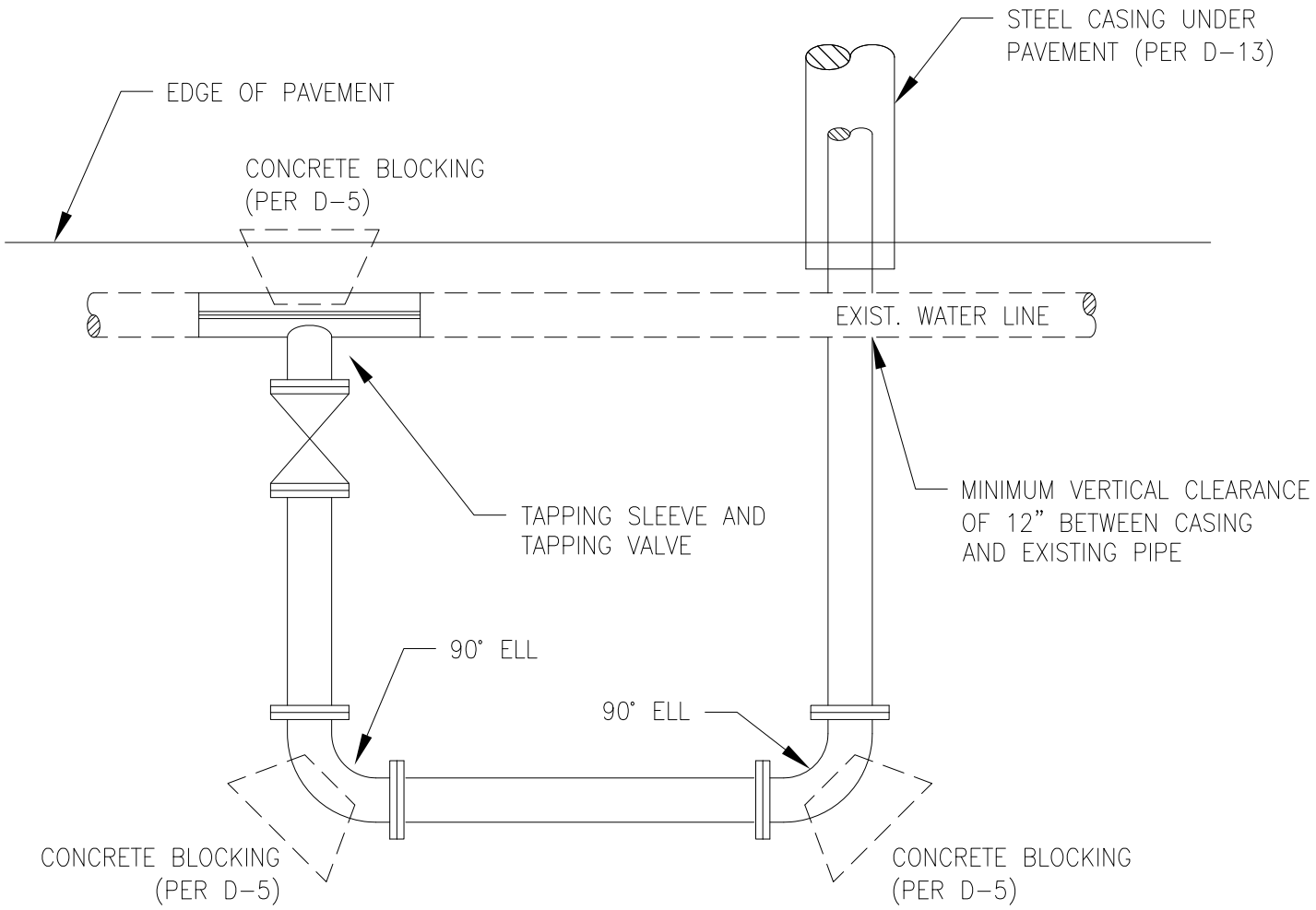

NOTES:

1. THE TAPPING VALVE AND BOTH 90° ELLS SHALL BE FULLY RODDED TOGETHER. ALL CONCRETE BLOCKING SHALL BE AGAINST UNDISTURBED SOIL.

2. A BACKTAP SHALL NOT BE INSTALLED BY THE CONTRACTOR UNLESS SPECIFICALLY SHOWN ON THE WATER LINE DRAWINGS APPROVED FOR CONSTRUCTION.

BACKTAP INSTALLATION	
WALTON COUNTY GEORGIA ESTABLISHED 1818	STANDARD DETAIL – WATER
SCALE: NONE	D-8
DATE: 08-25-17	

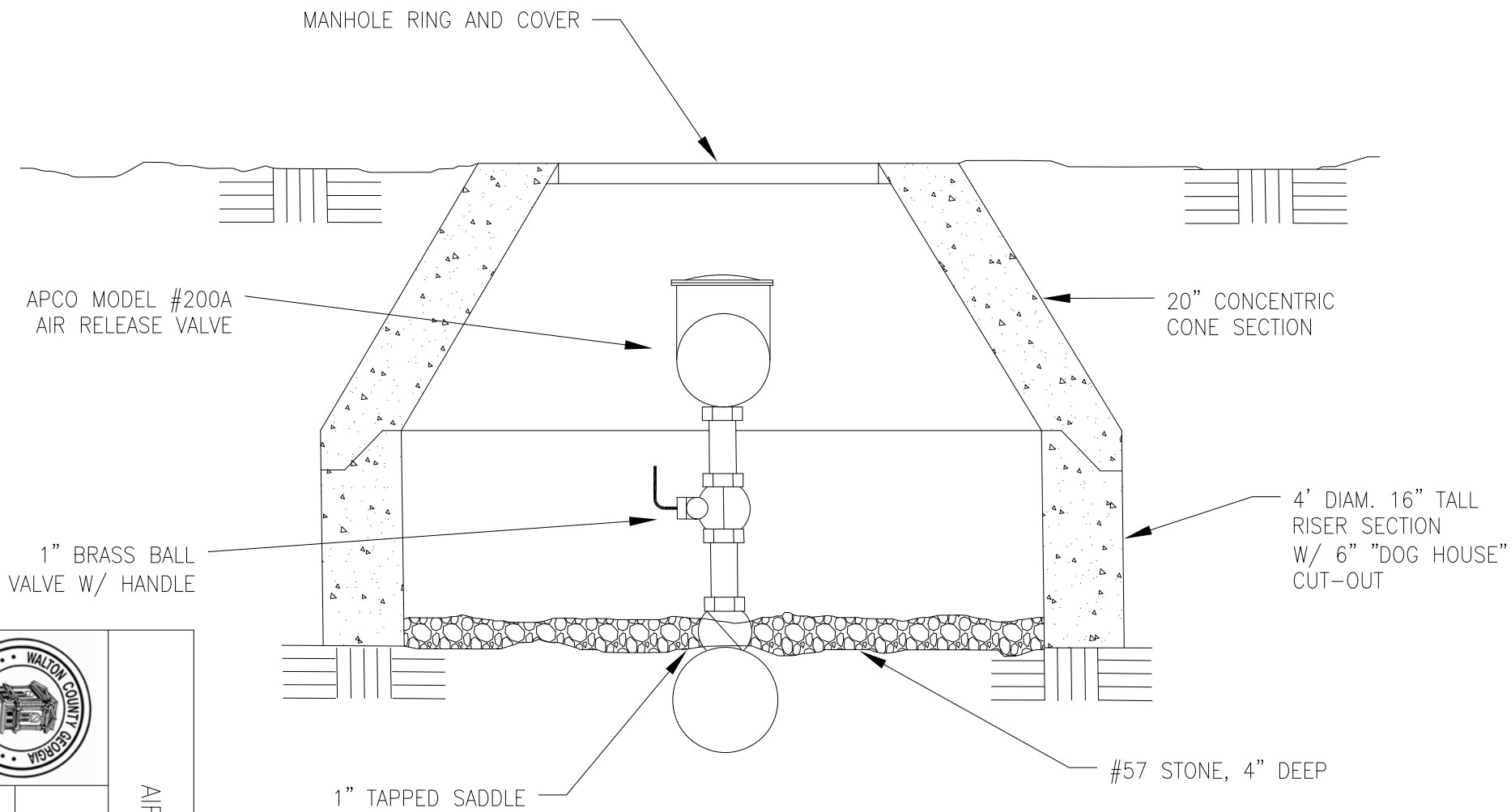

NOTES:

1. MANHOLE SHALL HAVE "WATER" CAST ON THE COVER AND SHALL BE US FOUNDRY MODEL USF 227 WITH MINIMUM OF FOUR (4) 1" DIAMETER HOLES OR APPROVED EQUAL.

AIR RELEASE VALVE	
STANDARD DETAIL - WATER	SCALE: NONE
	DATE: 08-25-17
D-9	

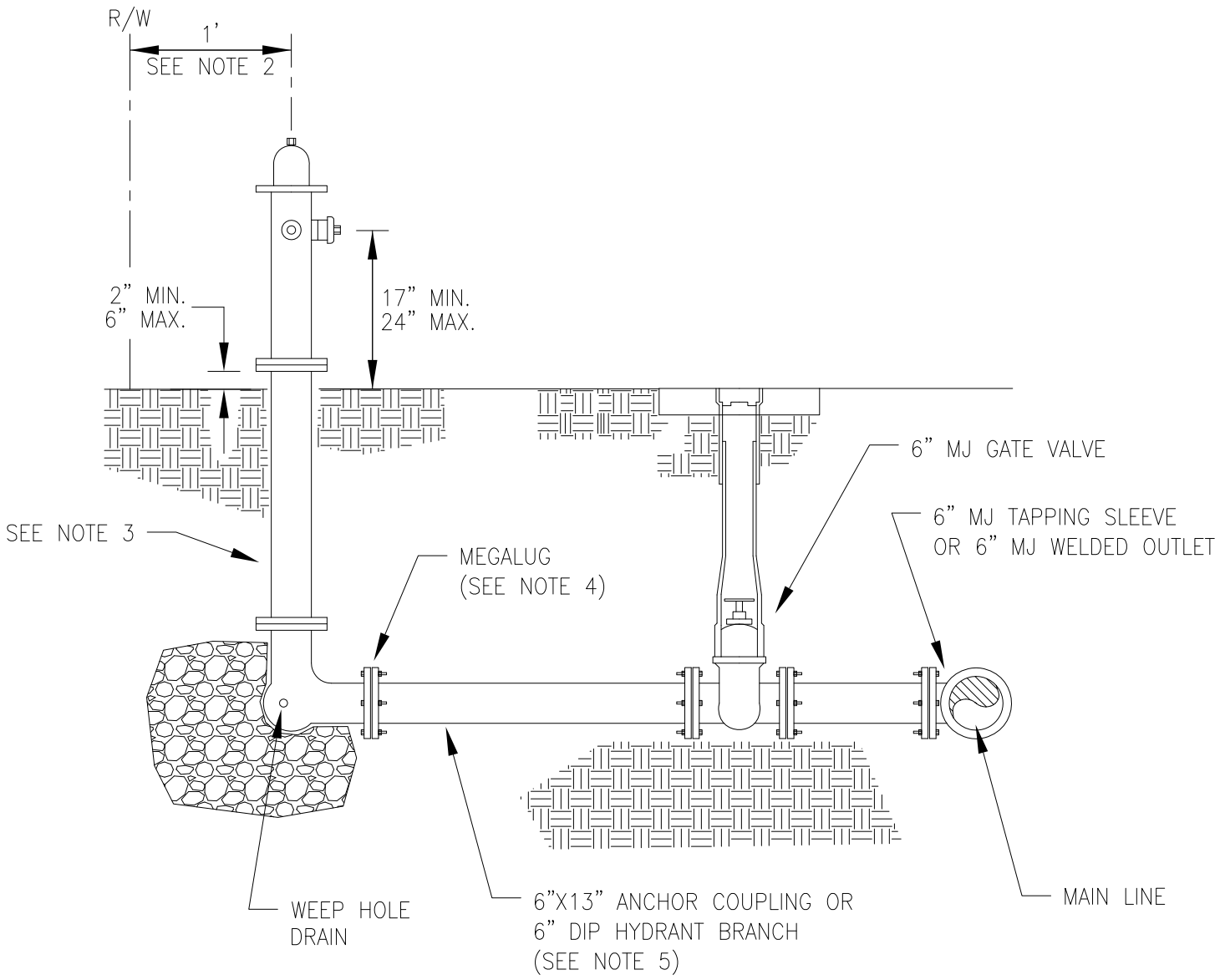

NOTES:

1. INSTALL GATE VALVE AND ACCESSORIES PER STANDARD DETAIL D-19.
2. OFFSET FROM R.O.W. MAY BE EXTENDED AT THE ENGINEER'S DISCRETION TO AVOID EXISTING SITE CONSTRAINTS.
3. EXTENSIONS USED TO BRING HYDRANT TO GRADE SHALL INCLUDE SURGE RODDING FOR PROPER RESTRAINT.
4. ALL JOINTS ON HYDRANT LEAD INCLUDING TEE AND VALVES SHALL BE RESTRAINED USING MEGALUGS.
5. LONGER ANCHOR COUPLINGS MAY BE USED WHEN REQUIRED. IF ANCHOR COUPLINGS ARE NOT USED, VALVE SHALL BE RODDED TO THE TEE AND HYDRANT SHALL BE RODDED TO THE VALVE USING A MINIMUM OF TWO (2) 3/4" STAINLESS STEEL THREADED RODS ON EACH CONNECTION.

FIRE HYDRANT ASSEMBLY	
WALTON COUNTY GEORGIA ESTABLISHED 1818	STANDARD DETAIL – WATER
SCALE: NONE	D-10
DATE: 08-25-17	

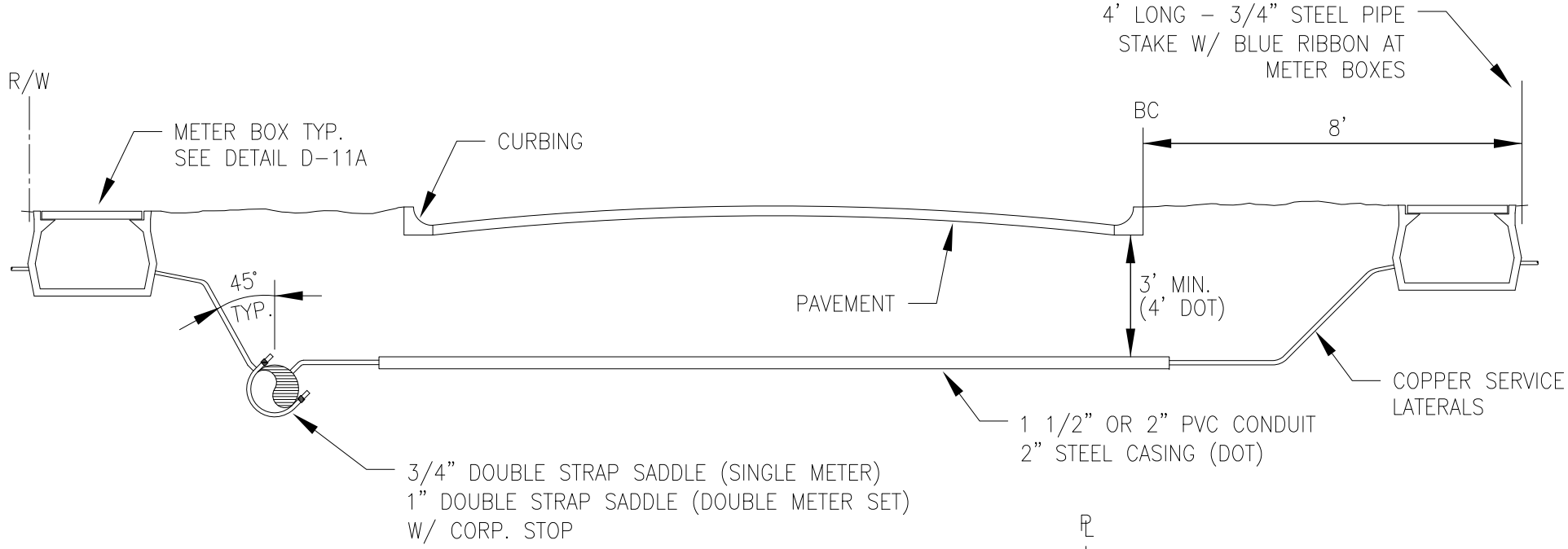

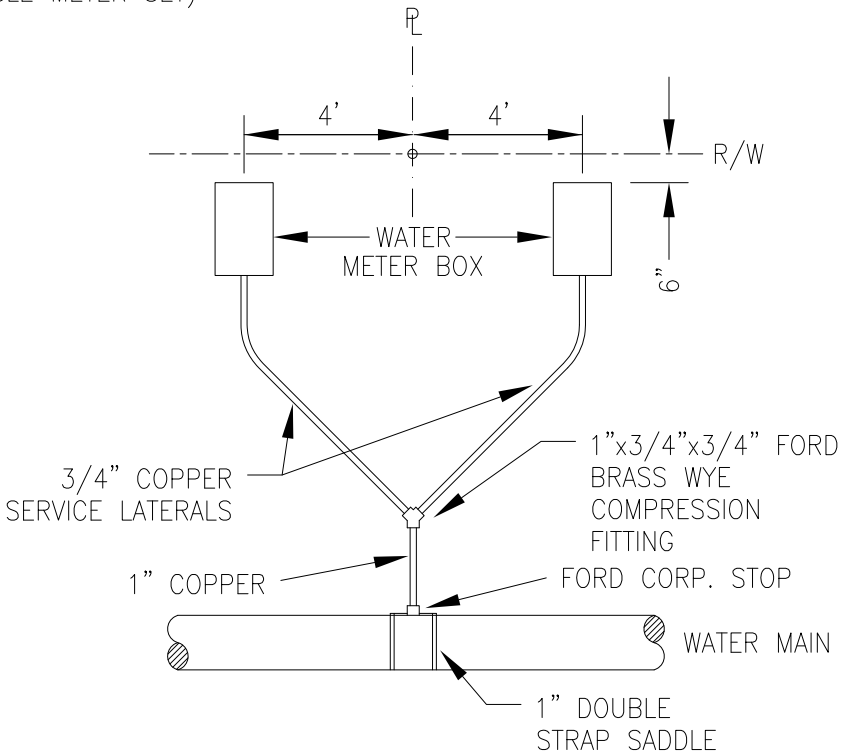

NOTES:

1. ALL METERS SHALL BE INSTALLED BY THE AUTHORITY.
2. ALL METER BOXES, SERVICES AND FITTINGS SHALL BE INSTALLED BY THE CONTRACTOR AS SHOWN.
3. NO TAPS SHALL BE MADE UNDER ASPHALT, DRIVEWAYS, OR MAILBOXES.

SERVICE CONNECTIONS	
STANDARD DETAIL – WATER	SCALE: NONE
	DATE: 08-25-17
	D-11

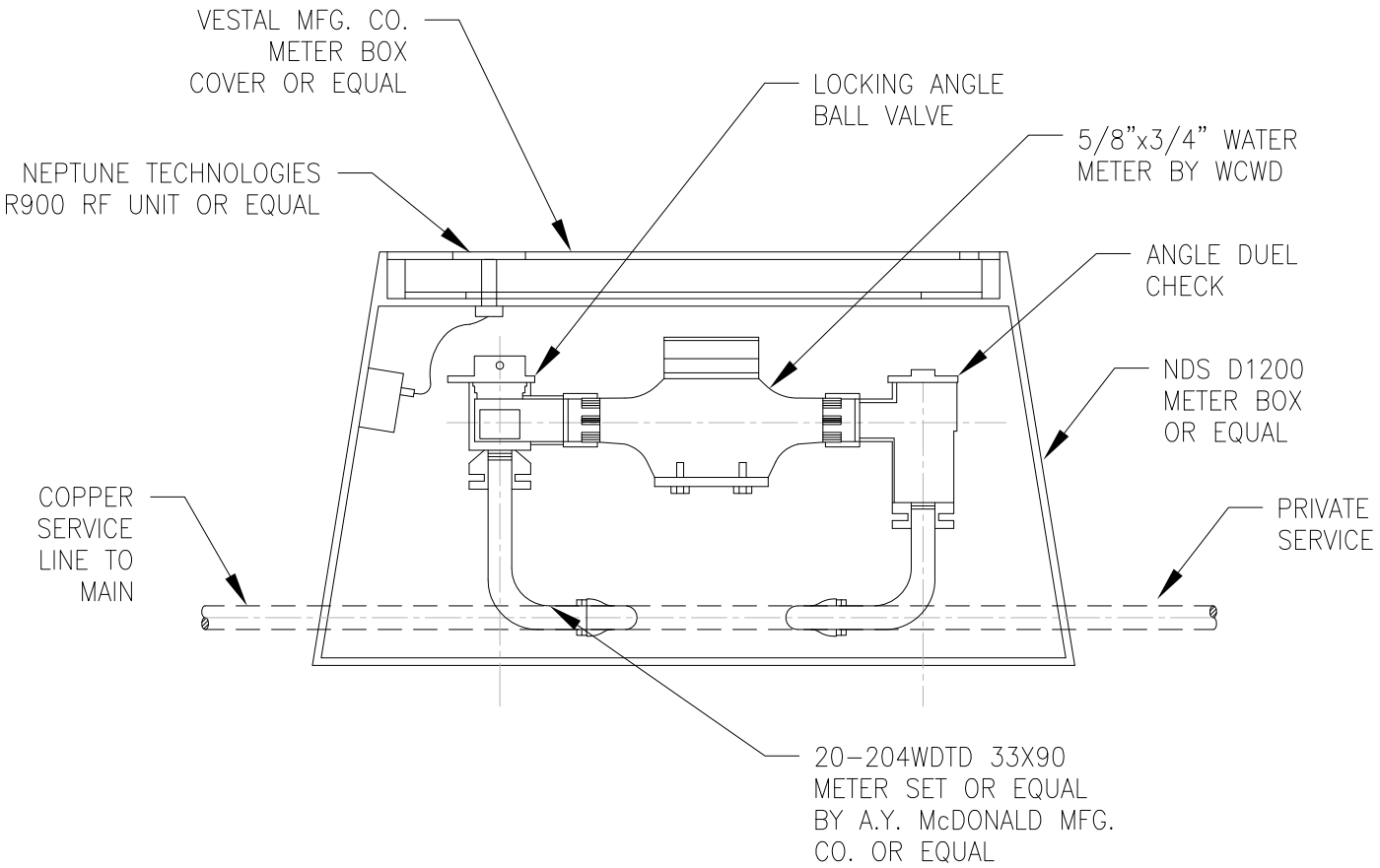

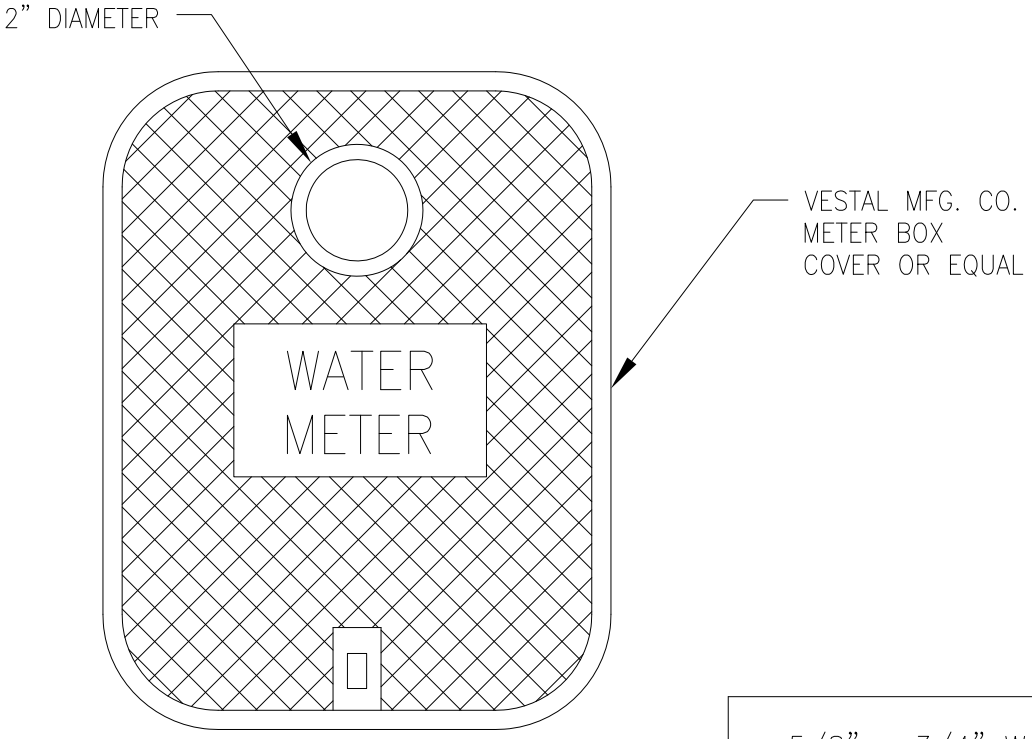

WATER METER CASE COVER

5/8" x 3/4" WATER METER SETTING	
STANDARD DETAIL – WATER	
SCALE: NONE	D-11A
DATE: 08-25-17	

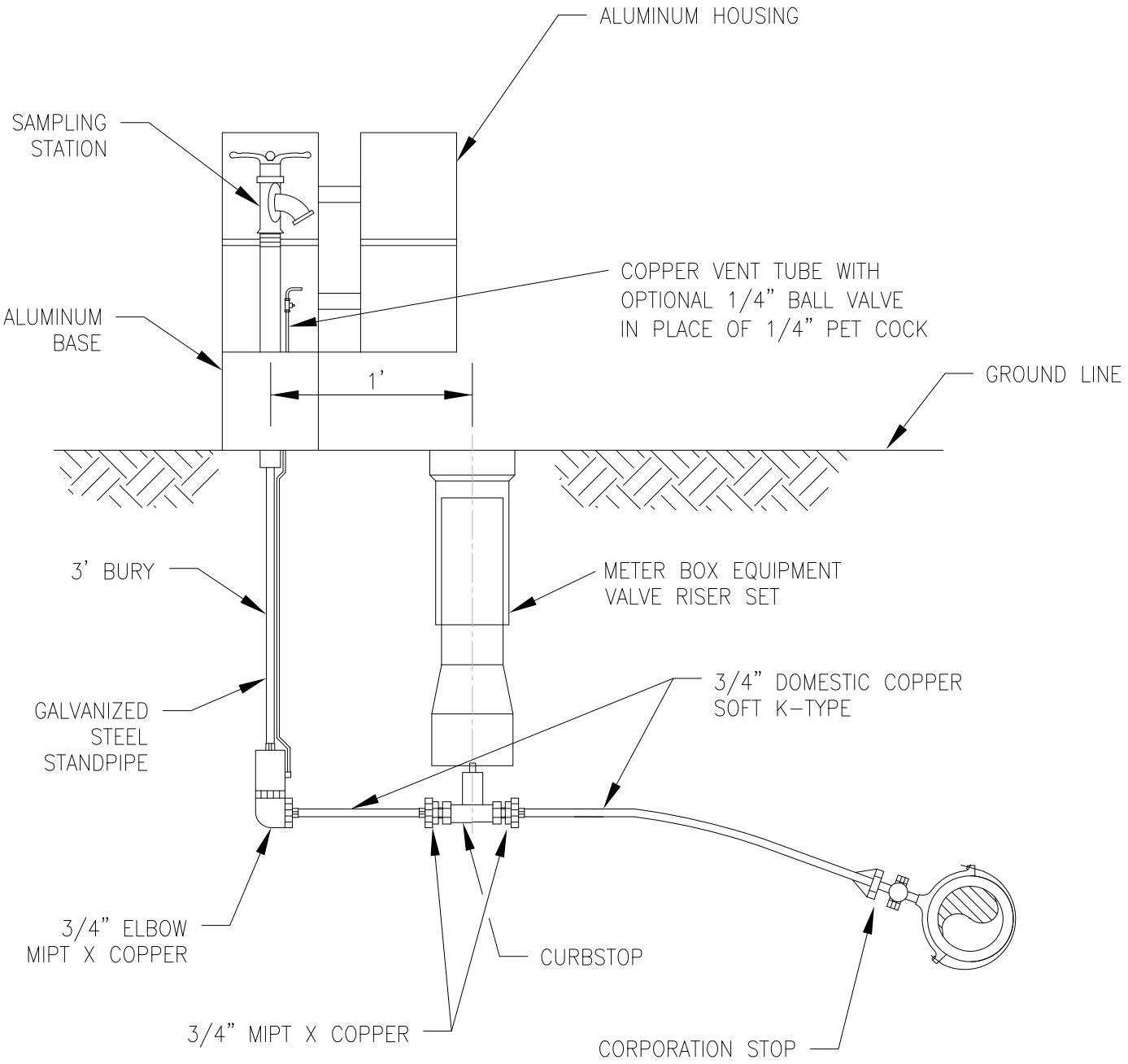

SAMPLING STATION	
STANDARD DETAIL – WATER	
SCALE: NONE	D–12
DATE: 08–25–17	

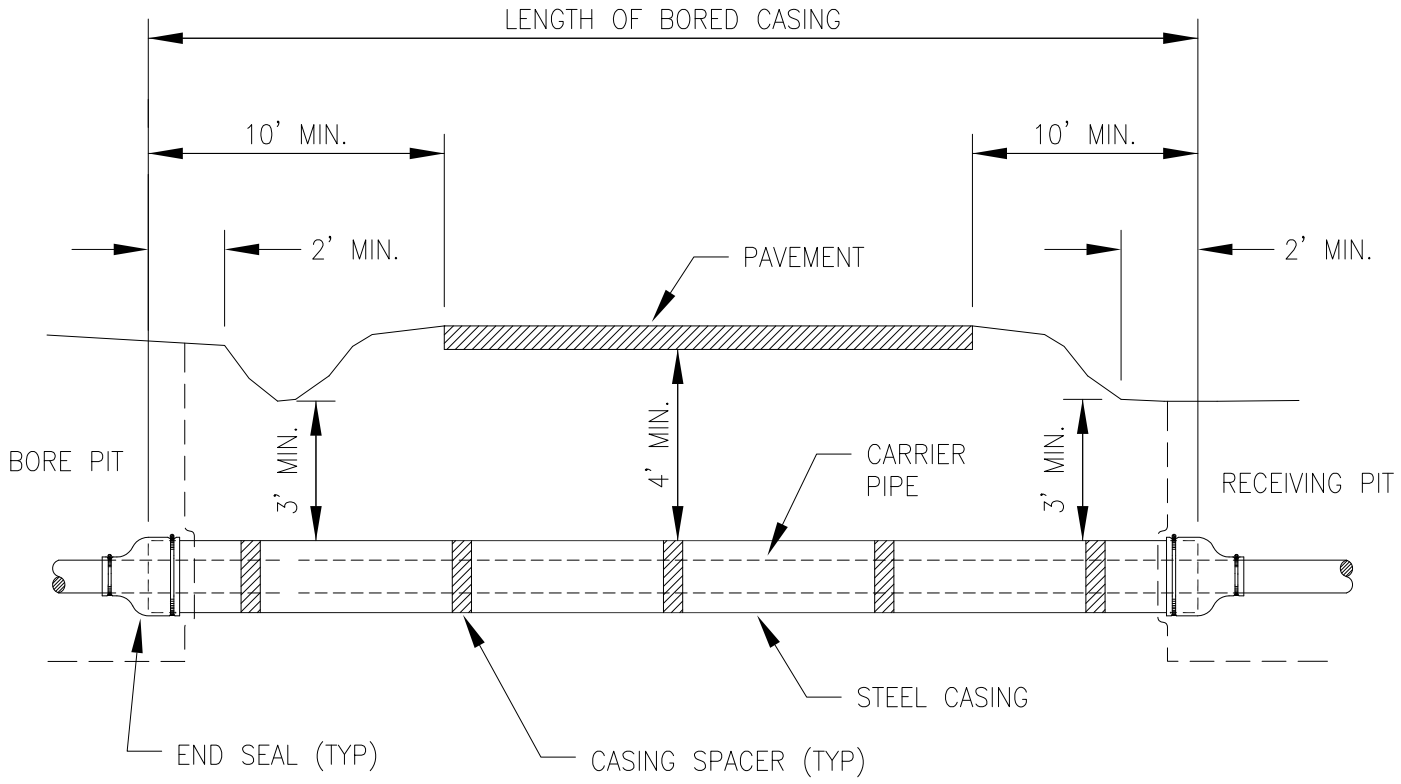

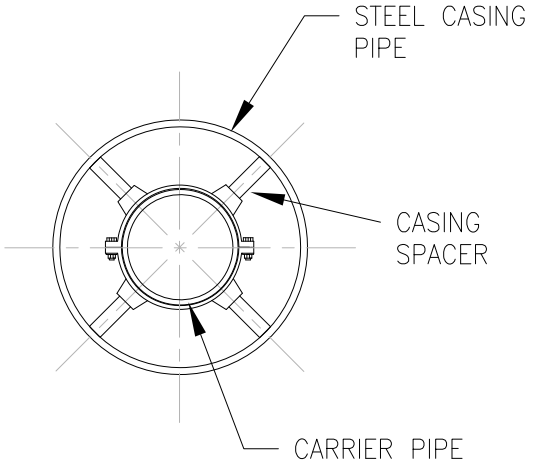

SPACER DETAIL

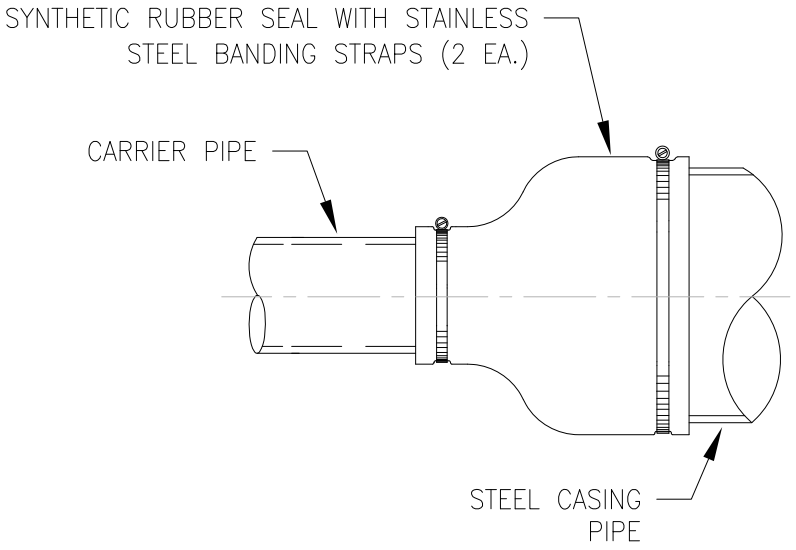

END SEAL DETAIL

NOTES:

1. CASING TO BE INSTALLED BY JACKING AND BORING.
2. CASING SPACERS SHALL BE STAINLESS STEEL AS MANUFACTURED BY ADVANCED PRODUCTS & SYSTEMS, INC. OR APPROVED EQUAL. SPACERS SHALL BE APPROPRIATELY DESIGNED FOR NUMBER OF CARRIER PIPES AS SHOWN IN THE PLANS.
3. SPACERS REQUIRED AT EACH END OF CASING, AT BELLS AND IN THE MIDDLE OF EACH JOINT OF PIPE WITH MAXIMUM DISTANCE BETWEEN SPACERS OF 10'-0".

TYPICAL ROAD BORE AND CASING DETAIL	
WALTON COUNTY GEORGIA ESTABLISHED 1818	STANDARD DETAIL – WATER
SCALE: NONE	D-13
DATE: 08-25-17	

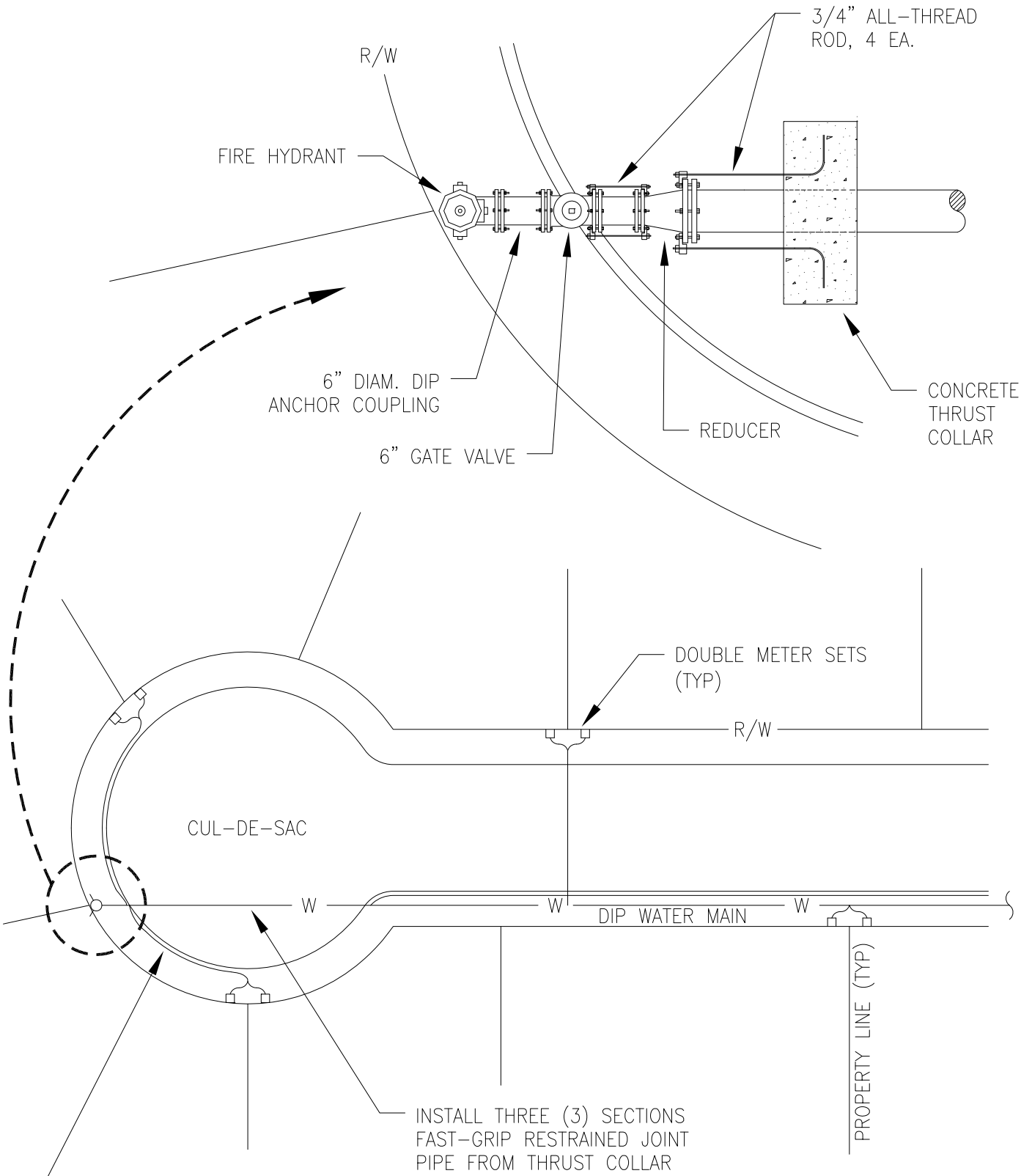

NOTES:

1. CONCRETE THRUST COLLAR SHALL BE SIZED AND CONSTRUCTED IN ACCORDANCE WITH DETAIL D-4.
2. SEE STANDARD DETAILS D-10 AND D-19 FOR FIRE HYDRANT AND GATE VALVE INSTALLATION.

TYPICAL CUL-DE-SAC DETAIL	
WALTON COUNTY GEORGIA ESTABLISHED 1818	STANDARD DETAIL – WATER
SCALE: NONE	D-14
DATE: 08-25-17	

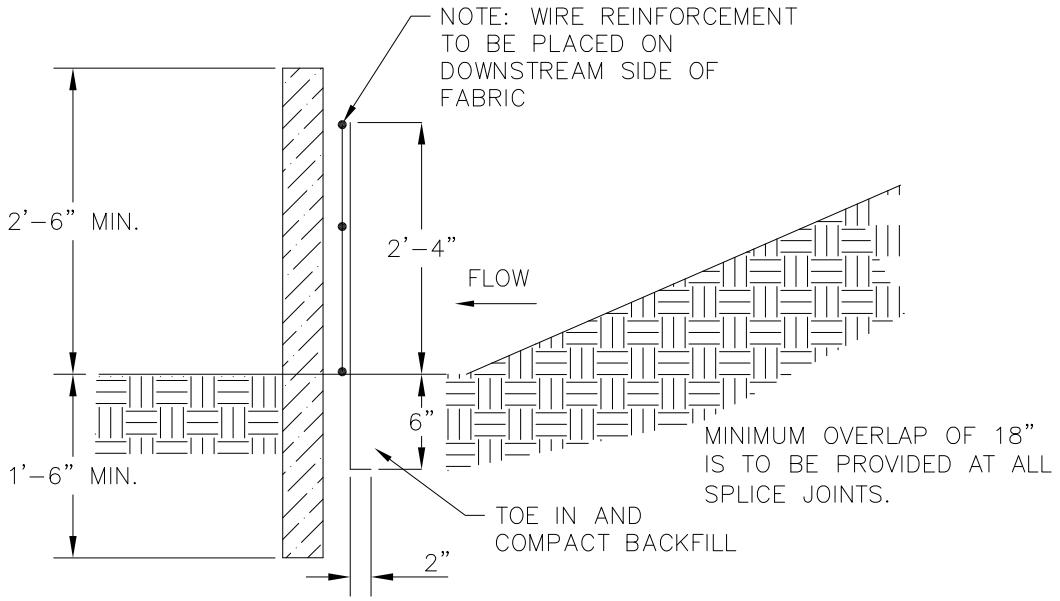

SIDE VIEW

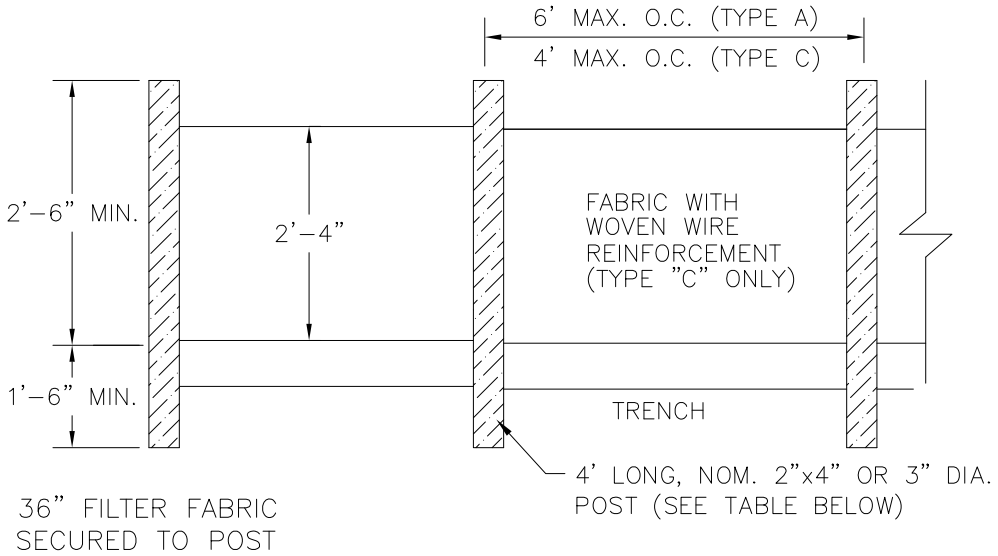

FRONT ELEVATION

Sd1-A

Sd1-C

SILT FENCE TYPE	POST MAT'L	REINFORCEMENT
"A"	WOOD OR STEEL	N/A
"C"	STEEL	WOVEN WIRE BEHIND FABRIC

SILT FENCE DETAIL

STANDARD DETAIL – WATER

SCALE: NONE

DATE: 08-25-17

D-15

L = THE DISTANCE SUCH THAT POINTS
A AND B ARE OF EQUAL ELEVATION

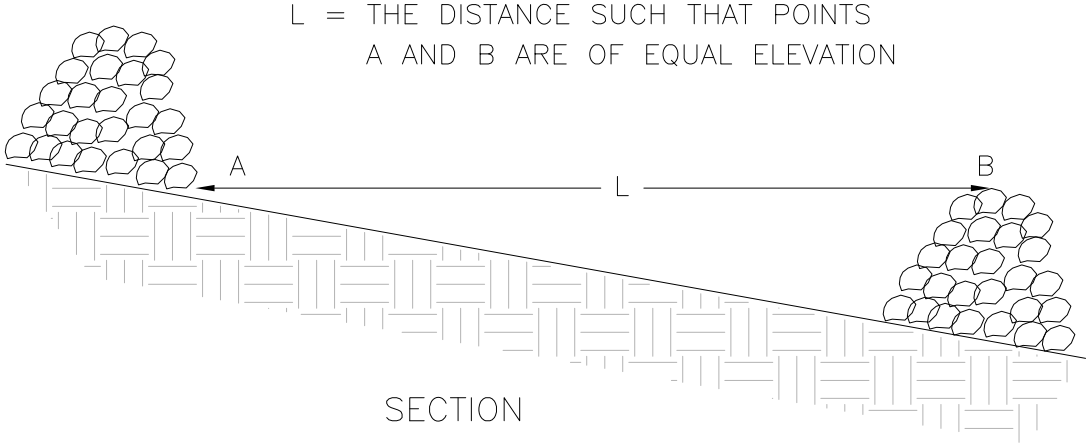

SECTION

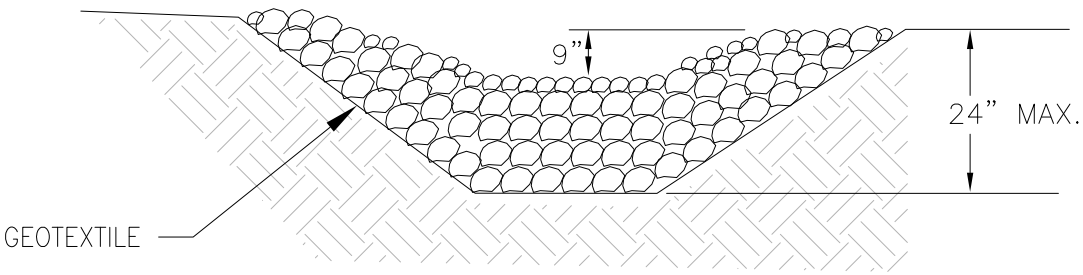

SECTION

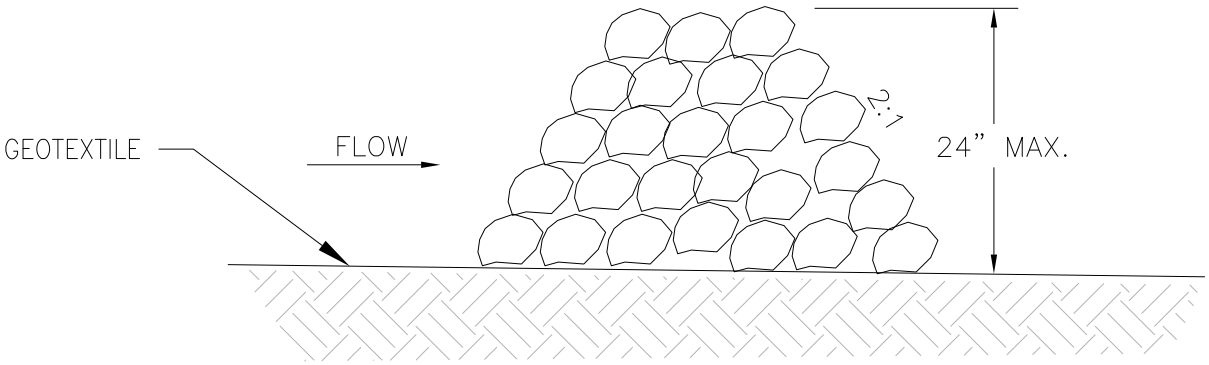

SECTION

STONE CHECK DAMS SHALL BE CONSTRUCTED
OF 2–10 INCH STONES.

Cd

STONE CHECK DAM DETAIL		
WALTON COUNTY GEORGIA ESTABLISHED 1818	STANDARD DETAIL – WATER	
	SCALE: NONE	D–16
	DATE: 08–25–17	

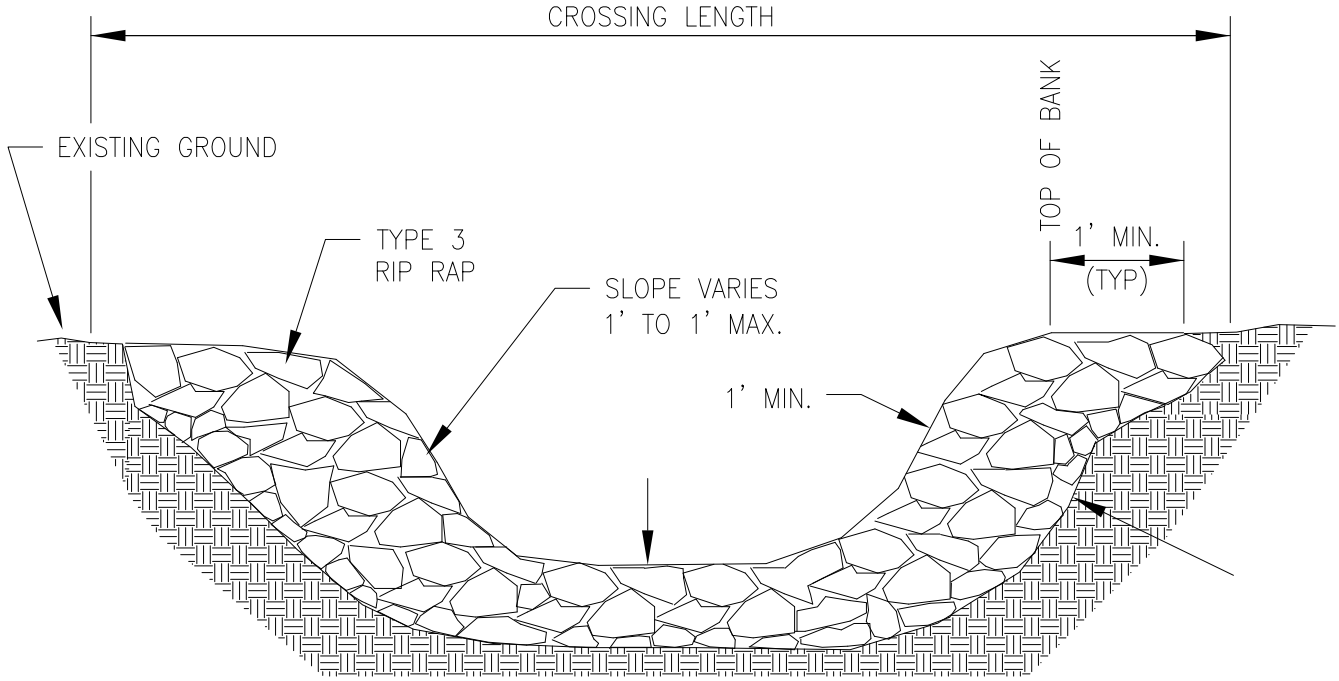

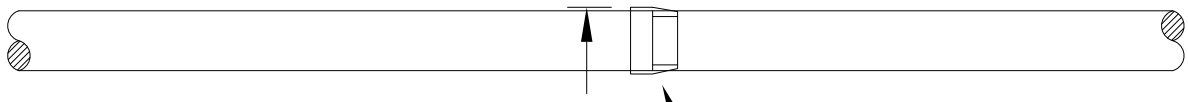

MIN. ONE JOINT (±20 LF) D.I. PIPE REQUIRED. IF MORE THEN ONE JOINT IS REQUIRED TO CROSS CREEK (TOP BANK TO OPPOSITE TOP BANK) THEN USE RESTRAINED JOINT (R.J.) D.I. PIPE BEYOND TOP OF BANK LIMITS. R.J. D.I. PIPE SHALL BE FAST-GRIP PIPE AS MANUFACTURED BY THE AMERICAN CAST IRON PIPE COMPANY OR APPROVED EQUIVALENT.

NOTES:

1. SURFACE OF RIP RAP SHALL CONFORM WITH EXISTING INVERT.

MINOR CREEK CROSSING	
WALTON COUNTY GEORGIA ESTABLISHED 1818	STANDARD DETAIL – WATER
SCALE: NONE	D-17
DATE: 08-25-17	

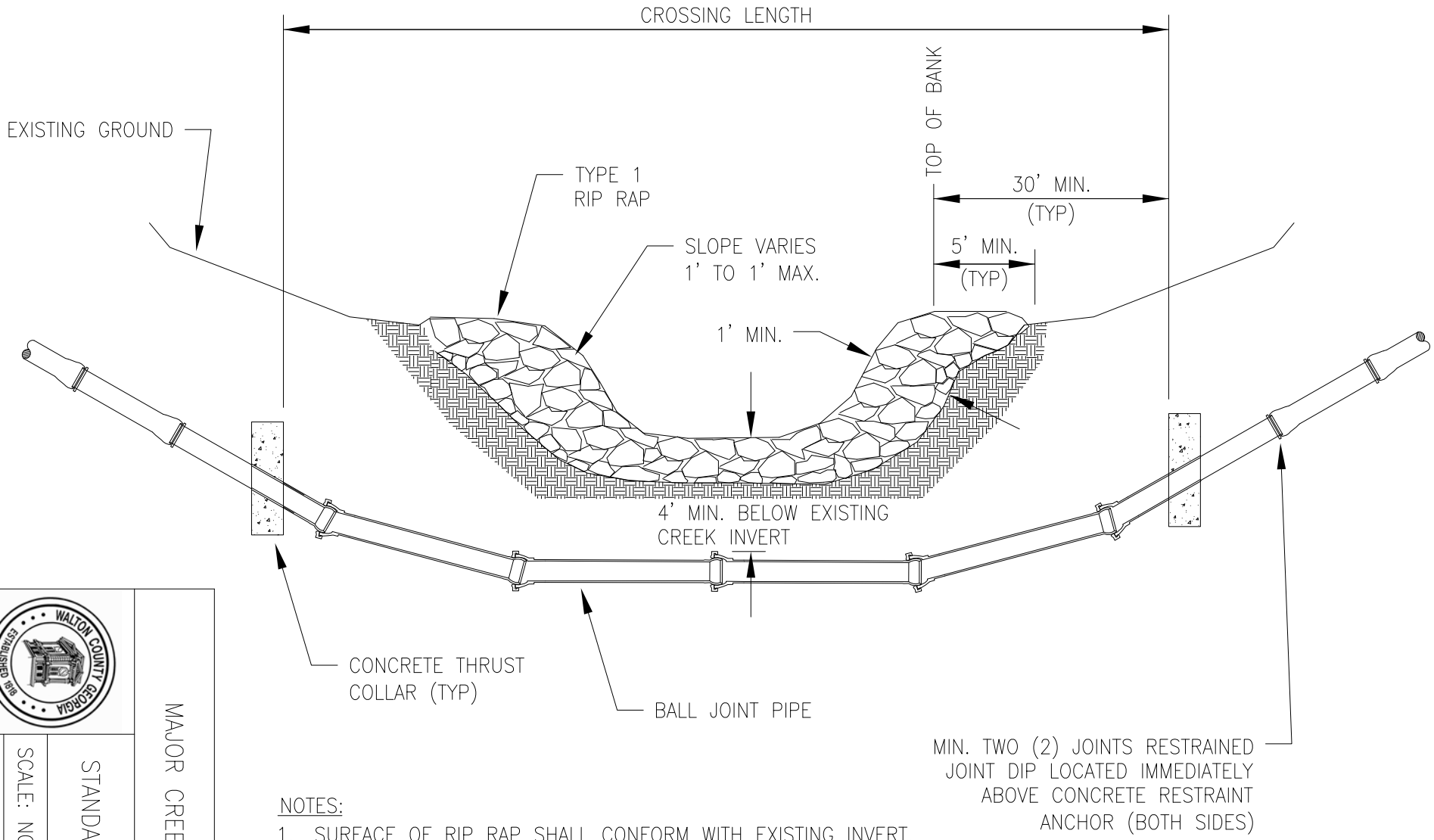

NOTES:

1. SURFACE OF RIP RAP SHALL CONFORM WITH EXISTING INVERT.
2. BALL JOINT PIPE SHALL BE FLEX-LOK PIPE AS MANUFACTURED BY AMERICAN CAST IRON PIPE COMPANY OR APPROVED EQUAL.
3. RESTRAINED JOINT PIPE ABOVE CONCRETE ANCHORS SHALL BE FAST-GRIP PIPE AS MANUFACTURED BY AMERICAN CAST IRON PIPE COMPANY OR APPROVED EQUAL.
4. CONCRETE THRUST COLLAR SHALL BE SIZED AND CONSTRUCTED IN ACCORDANCE WITH DETAIL D-4.
5. ISOLATION VALVES WITH PERMANENT SAMPLING TAPS SHALL BE INSTALLED ON EACH SIDE OF THE CROSSING.

WALTON COUNTY GEORGIA ESTABLISHED 1818

MAJOR CREEK CROSSING

STANDARD DETAIL - WATER

SCALE: NONE

DATE: 08-25-17

D-18

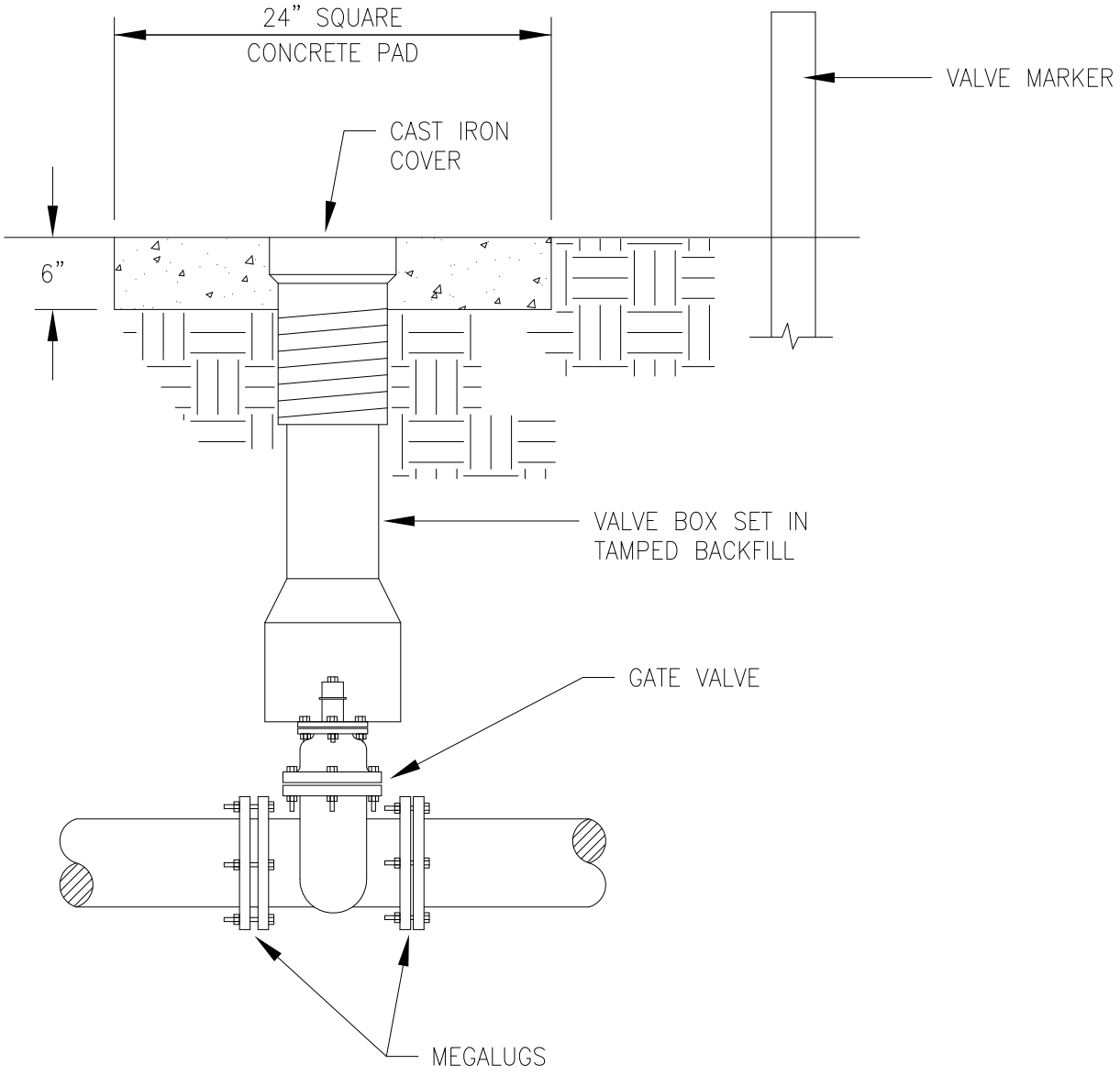

NOTES:

1. PROVIDE CONCRETE COLLAR FOR ALL VALVES INSTALLED IN UNPAVED AREAS.
2. VALVE BONNET SHALL NOT BE SUPPORTED BY ANY PORTION OF THE VALVE.
3. SEE STANDARD DETAIL D-20 FOR VALVE MARKER DETAILS.

GATE VALVE	
WALTON COUNTY GEORGIA ESTABLISHED 1818	STANDARD DETAIL – WATER
SCALE: NONE	D-19
DATE: 08-25-17	

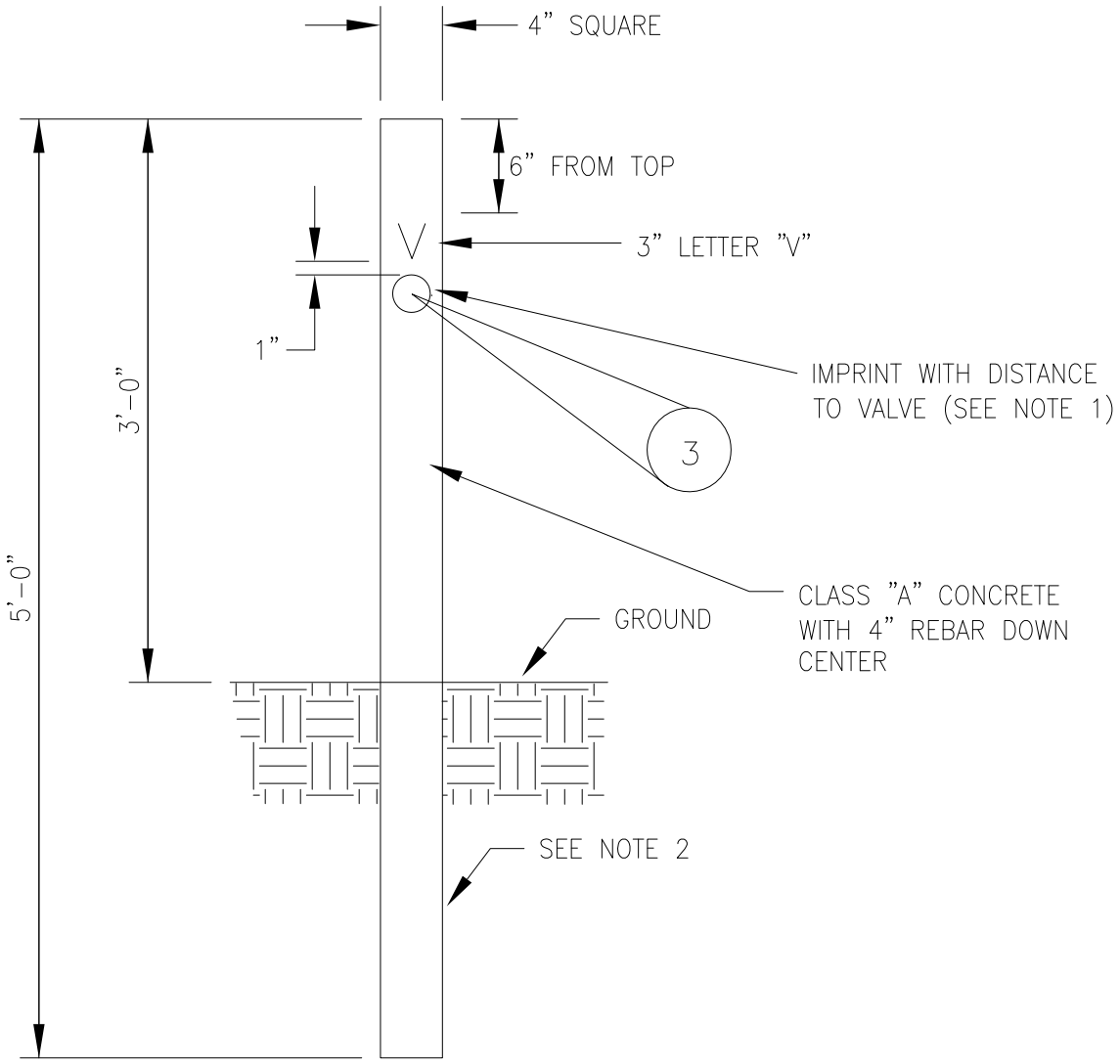

NOTES:

1. VALVE MARKER TO BE PLACED WITHIN THREE FEET (3') OF VALVE.
2. VALVE MARKERS SHALL BE BURIED TWO FEET INTO GROUND.

VALVE MARKER	
STANDARD DETAIL – WATER	
SCALE: NONE	D-20
DATE: 08-25-17	

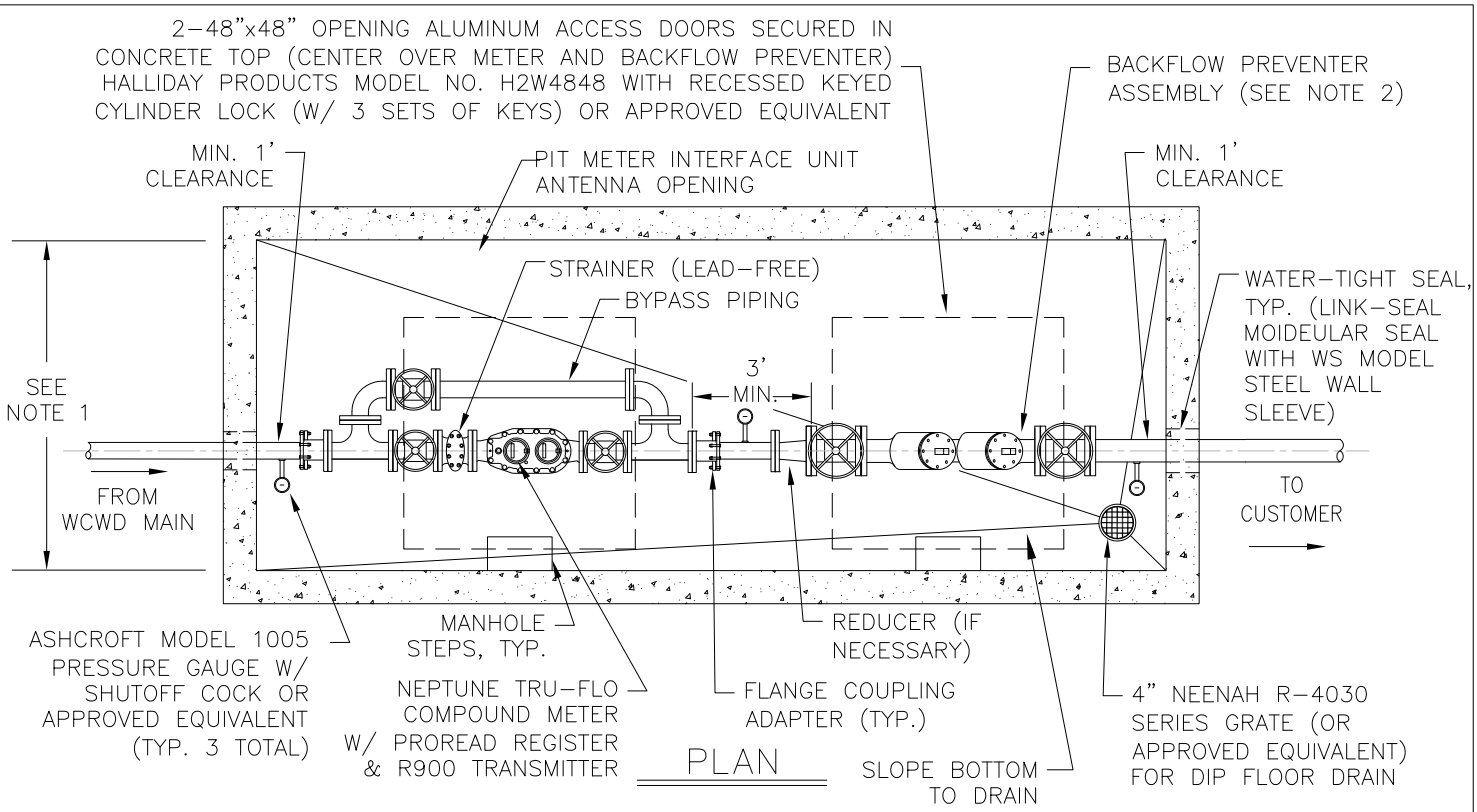

PLAN

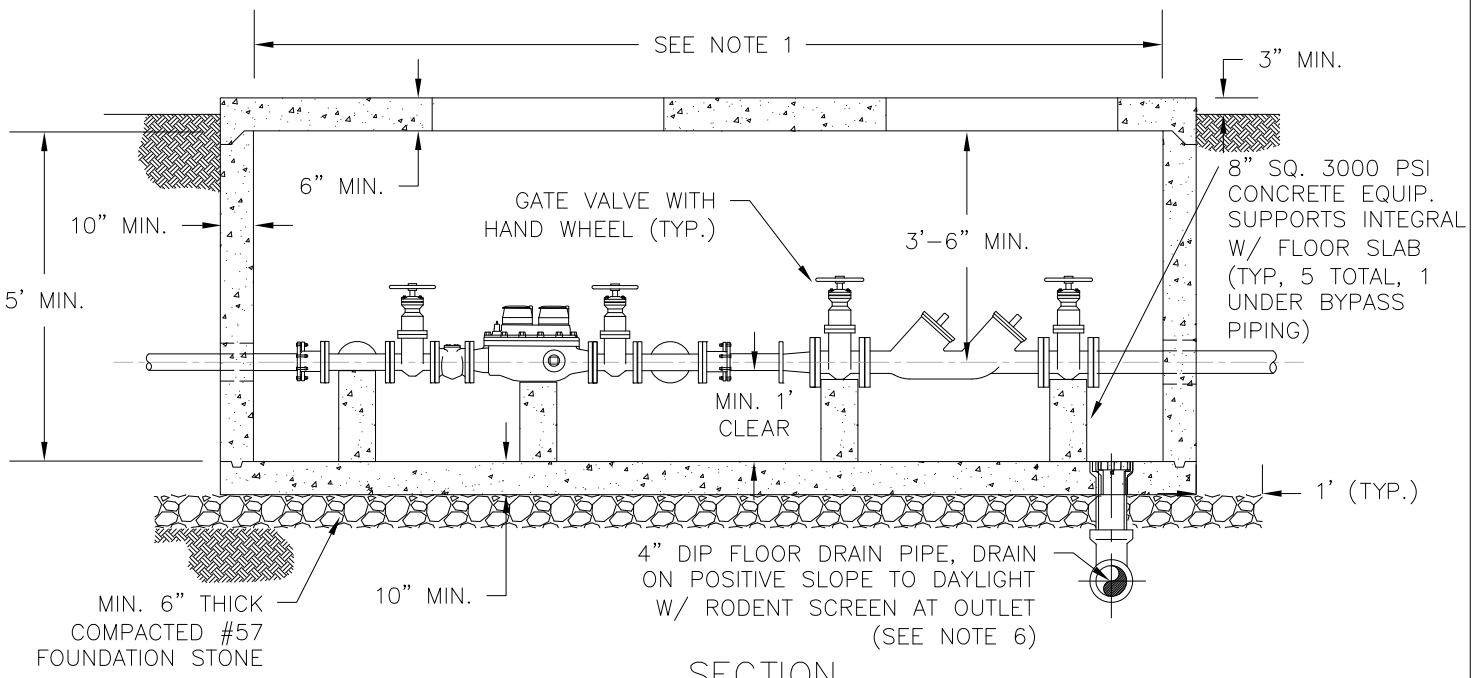

SECTION

NOTES:

1. VAULT DIMENSIONS SHALL BE SPECIFIED BY THE ENGINEER TO ACCOMMODATE EQUIPMENT SPECIFICATIONS & MINIMUM DIMENSIONS NOTED ON DETAIL.
2. BACKFLOW PREVENTER SHALL BE WATTS SERIES LF709-OSY, OR APPROVED EQUIVALENT. THIS DETAIL DOES NOT APPLY TO HEALTH HAZARD APPLICATIONS. FOR HEALTH HAZARD APPLICATIONS, WATTS SERIES LF909-OSY SHALL BE INSTALLED IN A HOTBOX ENCLOSURE, OR APPROVED EQUIVALENT. DETAIL SHALL BE PROVIDED BY THE ENGINEER FOR APPROVAL.
3. ALL FITTINGS AND PIPING WITHIN 20' OF VAULT TO BE RESTRAINED JOINT DIP.
4. VAULT SHALL BE REINFORCED CONCRETE (MIN. 4000 PSI) IN ACCORDANCE WITH ASTM C858 AND ASTM C913, DESIGNED FOR HS20-44 WHEEL LOADS. SUBMIT SHOP DRAWINGS STAMPED BY A GEORGIA REGISTERED PROFESSIONAL ENGINEER.
5. MANHOLE STEPS SHALL BE DOWELED TO WALL AND CENTERED AT EACH HATCH OPENING. RUNGS SHALL BE SET AT EQUAL DISTANCES FROM VAULT TOP TO BOTTOM AT APPROXIMATELY 12" BETWEEN RUNGS.
6. IF INSUFFICIENT SLOPE AVAILABLE, CONTRACTOR MAY INSTALL A MINIMUM OF 20 LF OF LEACHATE PIPE BEGINNING A MIN. 5' FROM VAULT. USE 4" PERFORATED PIPE ENCASED WITH 2'x2' #57 STONE CONNECTED TO 4" SOLID WALL DRAIN PIPE.

DOMESTIC WATER METER TRAFFIC BEARING VAULT	
WALTON COUNTY GEORGIA ESTABLISHED 1818	STANDARD DETAIL – WATER
SCALE: NONE	D-21
DATE: 08-25-17	

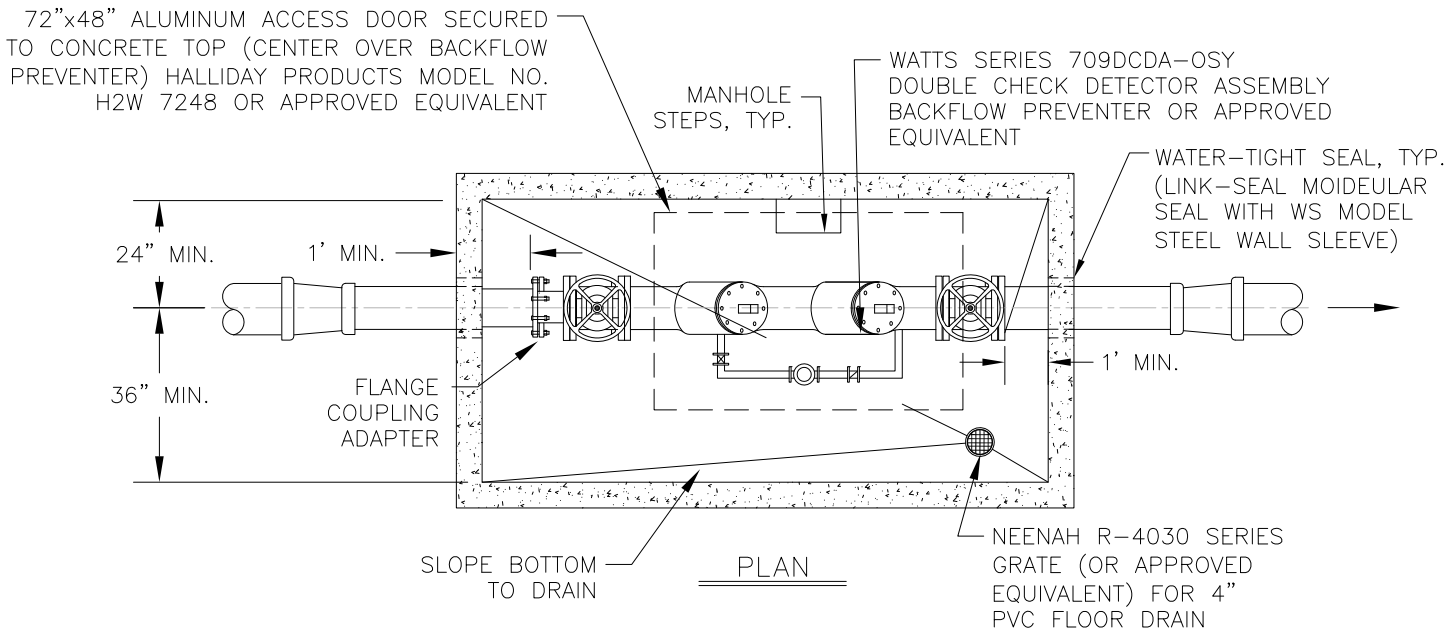

PLAN

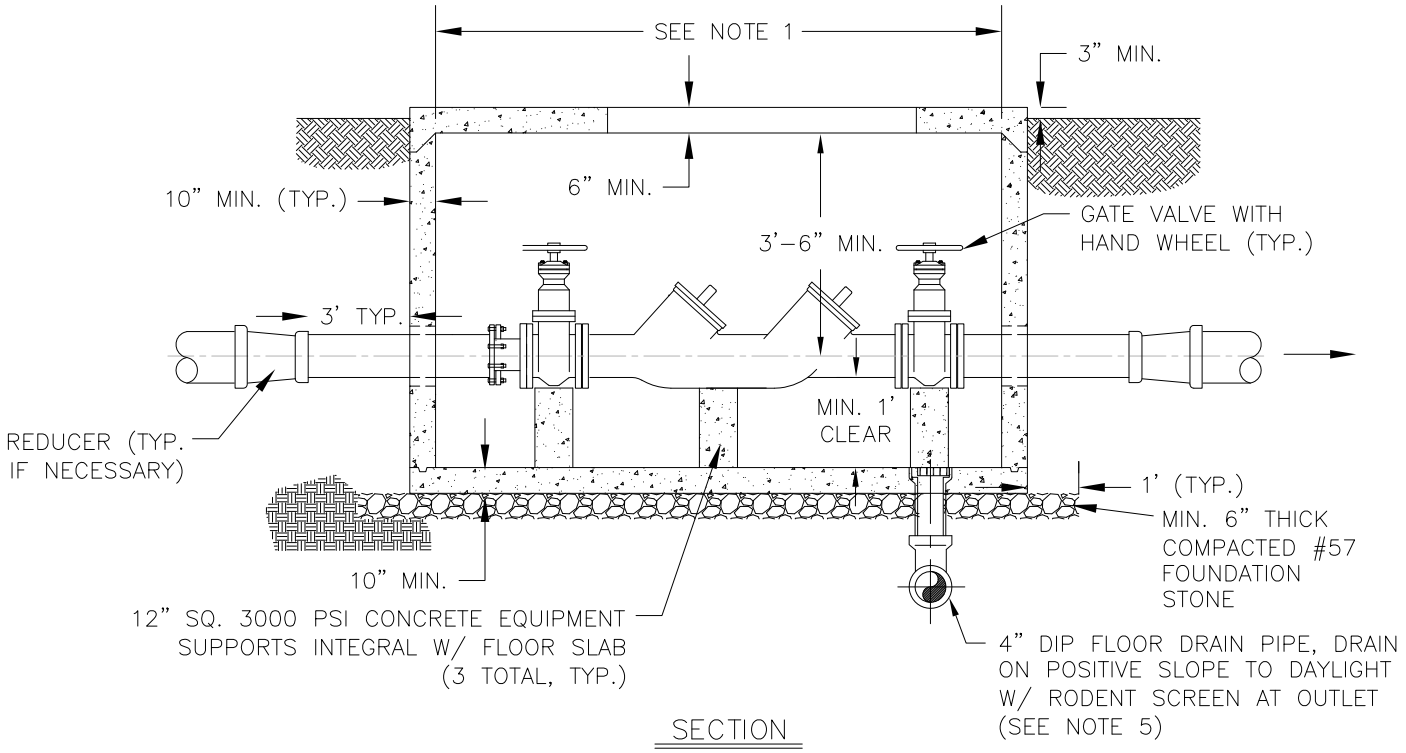

SECTION

NOTES:

1. VAULT DIMENSIONS SHALL BE SPECIFIED BY THE ENGINEER TO ACCOMMODATE EQUIPMENT SPECIFICATIONS & MINIMUM DIMENSIONS NOTED ON DETAIL.
2. ALL FITTINGS AND PIPING WITHIN 20' OF VAULT TO BE RESTRAINED JOINT DIP.
3. VAULT SHALL BE REINFORCED CONCRETE (MIN. 4000 PSI) IN ACCORDANCE WITH ASTM C858 AND ASTM C913, DESIGNED FOR HS20-44 WHEEL LOADS. SUBMIT SHOP DRAWINGS STAMPED BY A GEORGIA REGISTERED PROFESSIONAL ENGINEER.
4. MANHOLE STEPS SHALL BE DOWELED TO WALL AND CENTERED AT EACH HATCH OPENING. RUNGS SHALL BE SET AT EQUAL DISTANCES FROM VAULT TOP TO BOTTOM AT APPROXIMATELY 12" BETWEEN RUNGS.
5. IF INSUFFICIENT SLOPE AVAILABLE, CONTRACTOR MAY INSTALL A MINIMUM OF 20 LF OF LEACHATE PIPE BEGINNING A MIN. 5' FROM VAULT. USE 4" PERFORATED PIPE ENCASED WITH 2'x2' #57 STONE CONNECTED TO 4" SOLID WALL DRAIN PIPE.

DOUBLE CHECK DETECTOR ASSEMBLY TRAFFIC BEARING VAULT	
WALTON COUNTY GEORGIA ESTABLISHED 1818	STANDARD DETAIL – WATER
SCALE: NONE	D-22
DATE: 08-25-17	

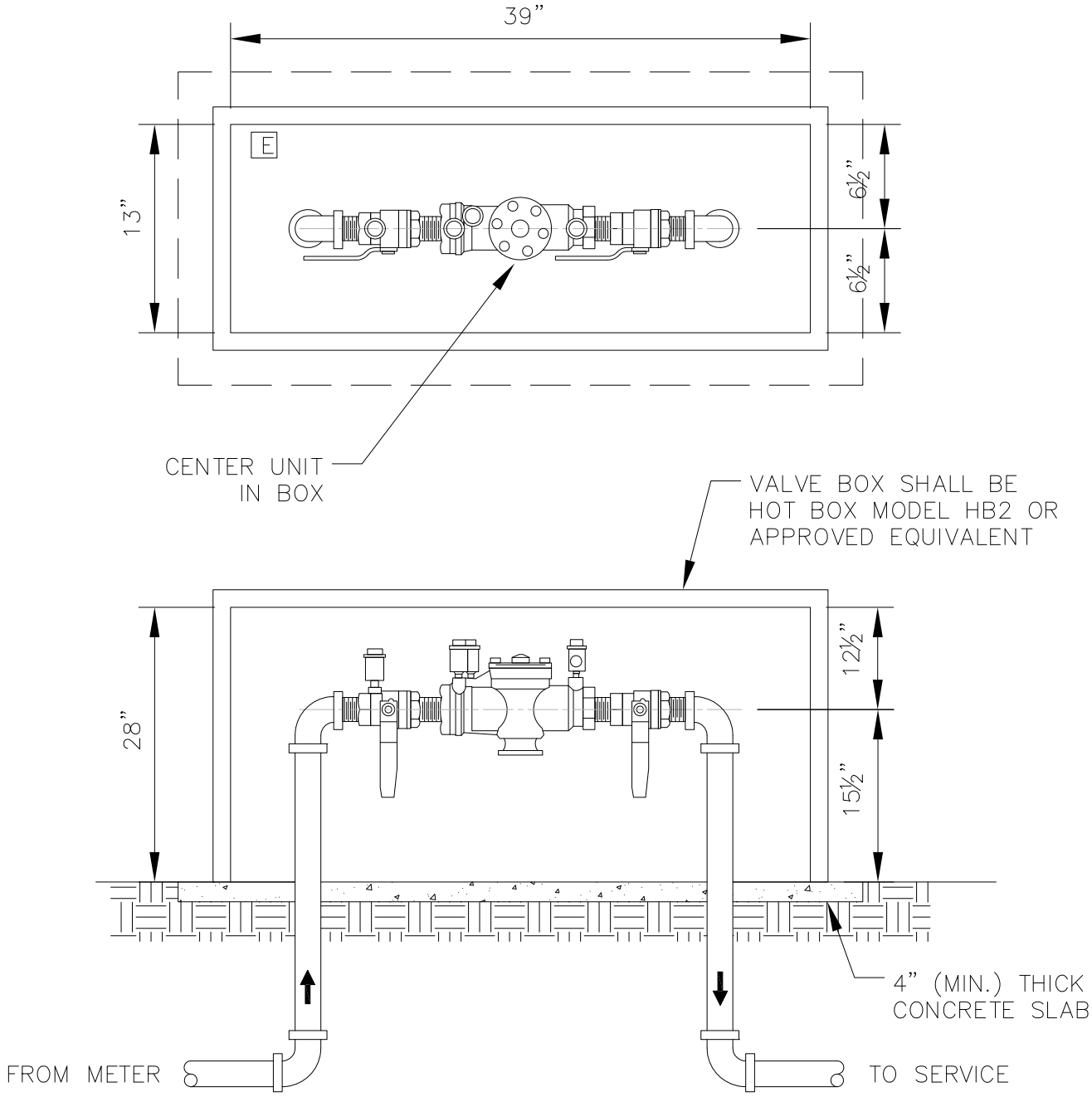

NOTES:

1. THE BACKFLOW PREVENTERS SHALL BE WATTS MODEL 009M2QTHC (HC FOR 2" ONLY) OR APPROVED EQUIVALENT.
2. CONCRETE PADS SHALL BE 50"L x 24"W x 4" MINIMUM THICKNESS.
3. "E" INDICATES ELECTRICAL RECEPTACLE.
4. ALL CIRCUITS ARE 120 VOLT, SINGLE PHASE, UNLESS OTHERWISE NOTED.
5. POWER SOURCES SHALL BE PROTECTED WITH A GROUND FAULT INTERRUPTING RECEPTACLE, U.L. STANDARD 943, N.E.M.A. 3R.
6. SERVICE TO "HOT BOX" MUST BE INSTALLED IN ACCORDANCE WITH THE NATIONAL ELECTRIC CODE AND LOCAL ORDINANCES.
7. CONTRACTOR TO PROVIDE UTILITY POLE WITH ELECTRICAL METER AND 120 VOLT, SINGLE PHASE SERVICE TO EACH HOT BOX. CONNECTIONS PER MANUFACTURER RECOMMENDATIONS.
8. CONTRACTOR SHALL BE FINANCIALLY RESPONSIBLE FOR ALL ELECTRICAL POWER REQUIREMENTS INCLUDING RUNNING POWER TO EACH "HOT BOX".
9. ALL PIPE AND FITTINGS SHALL BE STAINLESS STEEL WITH MINIMUM WORKING PRESSURE OF 150 PSI.

REDUCED PRESSURE ZONE BACKFLOW PREVENTER – 1 1/2" & 2"	
WALTON COUNTY GEORGIA ESTABLISHED 1818	STANDARD DETAIL – WATER
SCALE: NONE	D–23
DATE: 08–25–17	

(BLANK SHEET FOR PART IV TABBED DIVIDER)

PART IV. WASTEWATER SYSTEM STANDARD DETAILS

CONTENTS

DRAWING	DESCRIPTION
S-1	Standard Manhole
S-2	Standard Manhole Ring and Cover
S-3	Outside Drop Manhole
S-4	Force Main Trench & Backfill Requirements
S-5	PVC Sewer Pipe Bedding Detail
S-6	Sewer Pipe Bedding Detail
S-7	Typical Service Lateral Chimney Riser Service
S-8	Cut-In or Doghouse Manhole
S-9	Typical Lift Station Site Plan
S-10	Typical Lift Station Control Panel
S-11	Weather Hood For Lift Station Control Panel
S-12	Thrust Blocking
S-13	Concrete Collar
S-14	Standard Concrete Patch
S-15	Asphalt Pavement Patch

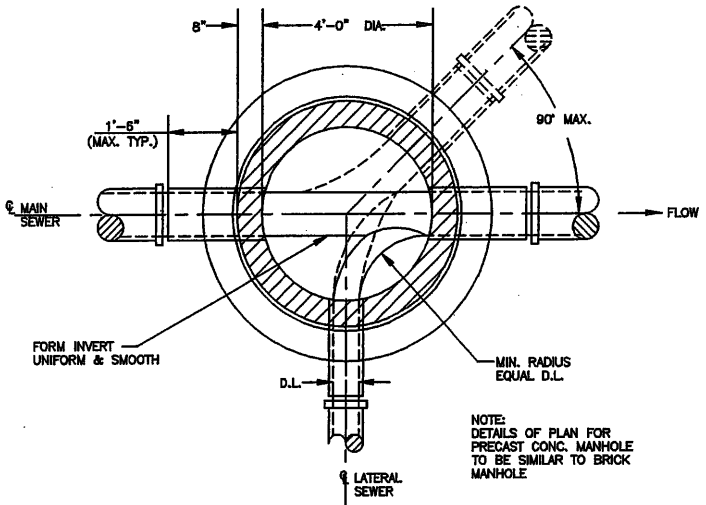

PLAN
N.T.S.

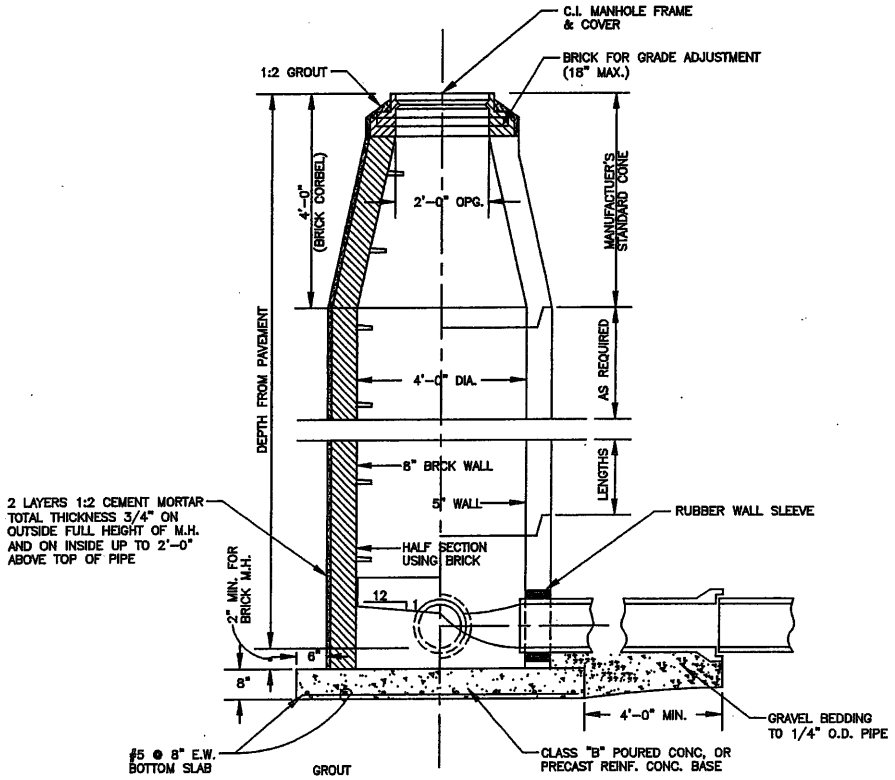

SECTION
DETAIL OF STANDARD MANHOLE
N.T.S.

STANDARD MANHOLE	
WALTON COUNTY GEORGIA ESTABLISHED 1818	STANDARD DETAIL – SEWER
SCALE: NONE	S-1
DATE: 08-25-17	

MANHOLE FRAME AND COVER

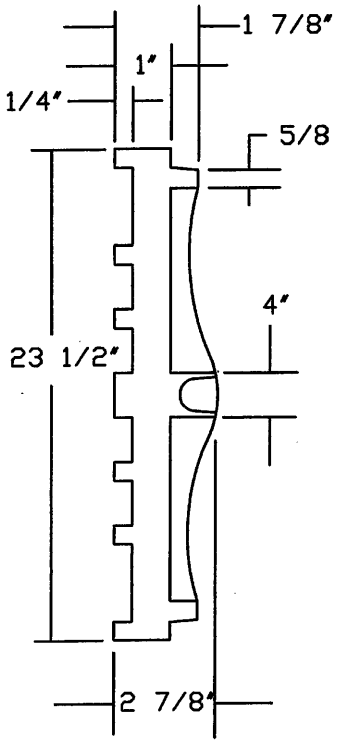

COVER 120 LBS. MINIMUM

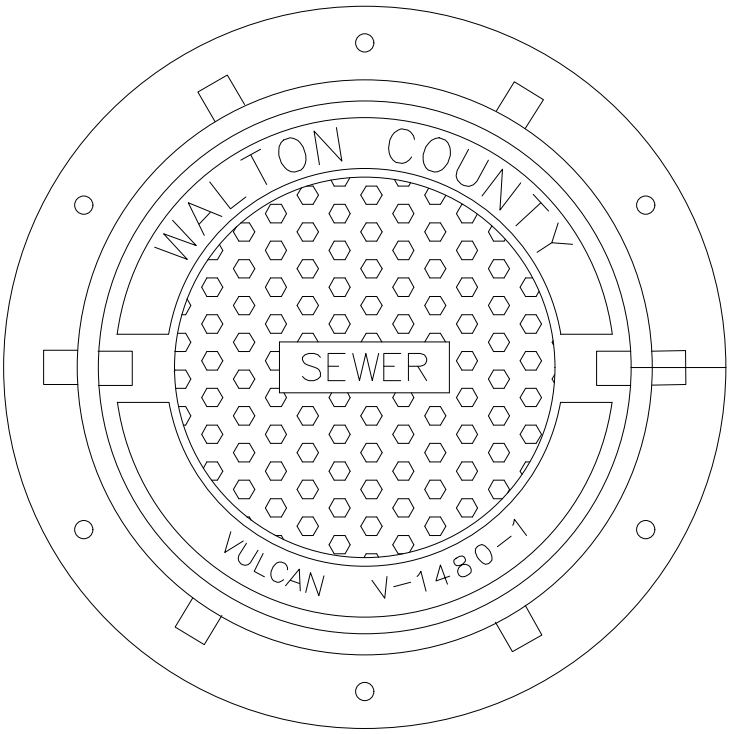

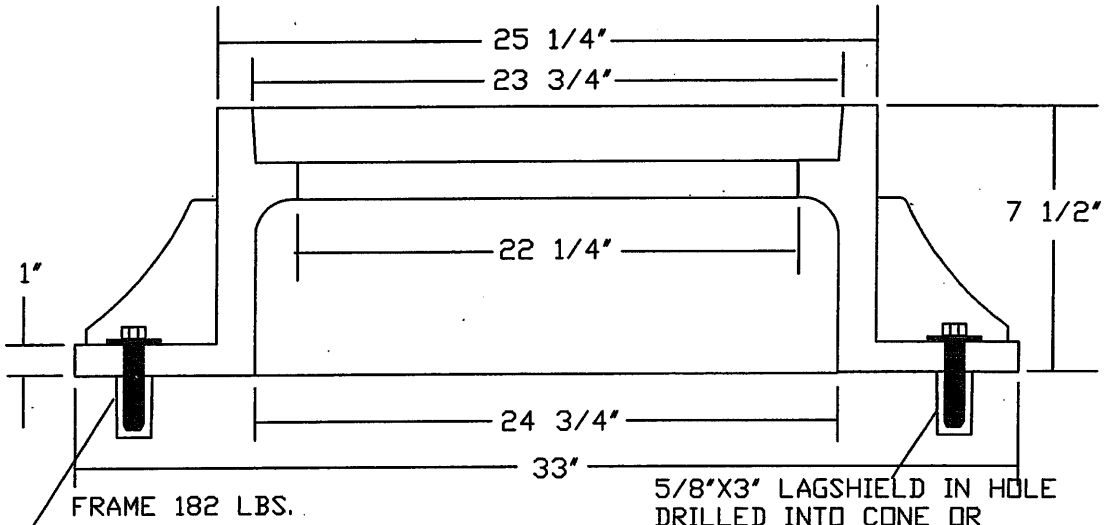

FRAME 182 LBS.

LAGSHIELDS ONLY MAY BE USED IN ROADWAY APPLICATIONS.

OR

5/8"X3" LAGSHIELD IN HOLE DRILLED INTO CONE OR RING WITH ANCHOR SUNK TO DESIGN DEPTH, AND 5/8"X3" HOT DIPPED GALVANIZED LAG BOLT AND WASHER.

NOTE:
COVER SHALL BE VULCAN V-1480-1, NEENAH R-1642, OR APPROVED EQUAL.

STANDARD MANHOLE RING AND COVER	
WALTON COUNTY GEORGIA ESTABLISHED 1818	STANDARD DETAIL – SEWER
SCALE: NONE	S-2
DATE: 08-25-17	

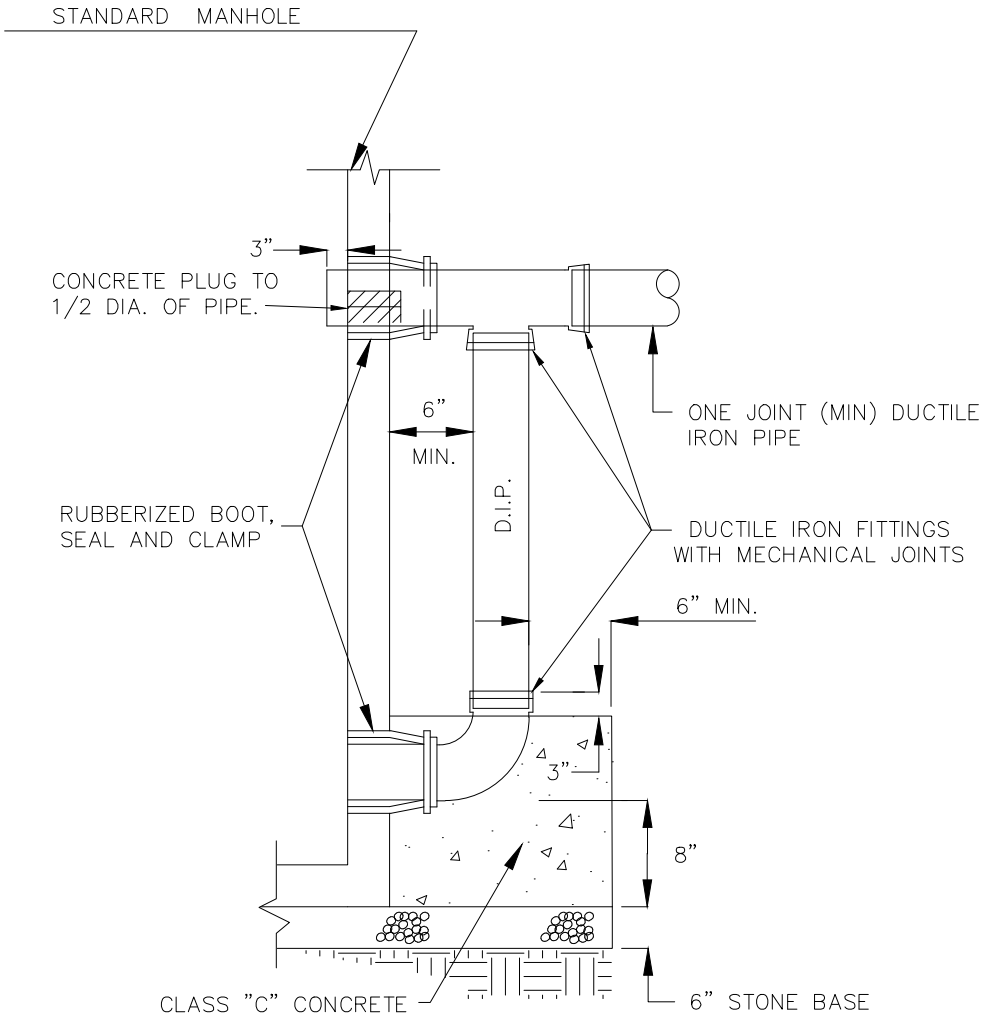

OUTSIDE DROP MANHOLE		
WALTON COUNTY GEORGIA ESTABLISHED 1818	STANDARD DETAIL – SEWER	
	SCALE: NONE	S–3
	DATE: 08–25–17	

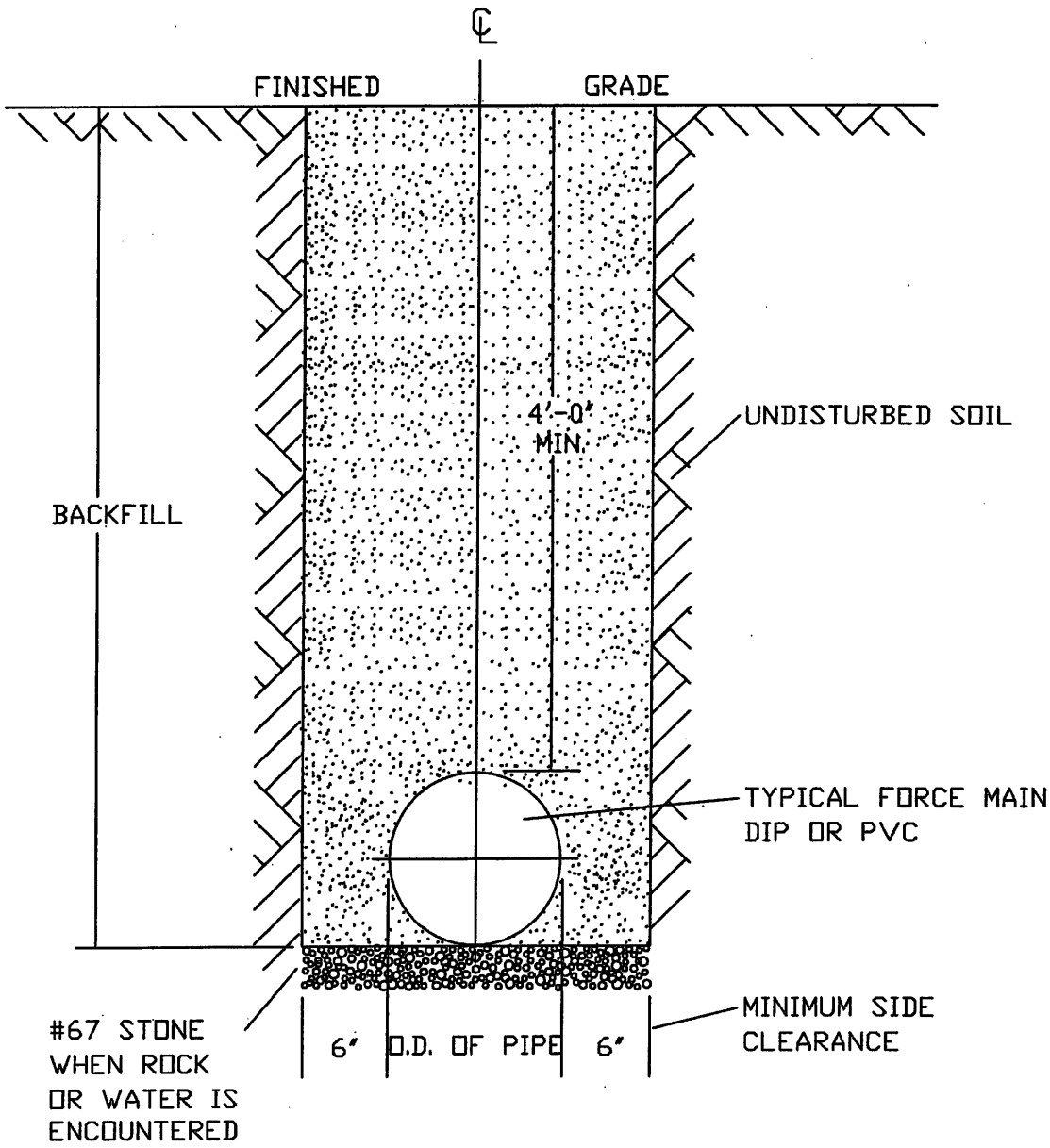

NOTES:

1. Trenches requiring shoring and bracing, dimensions shall be taken from the inside face of the shoring and bracing.
2. No rocks or boulders 4" or larger to be used in backfill.
3. All backfill material shall be suitable native material.
4. Backfill shall be tamped in 6" lifts.
5. Achieve 95% compaction in backfill.

FORCE MAIN TRENCH & BACKFILL REQUIREMENTS	
WALTON COUNTY GEORGIA ESTABLISHED 1818	STANDARD DETAIL – SEWER
SCALE: NONE	S–4
DATE: 08–25–17	

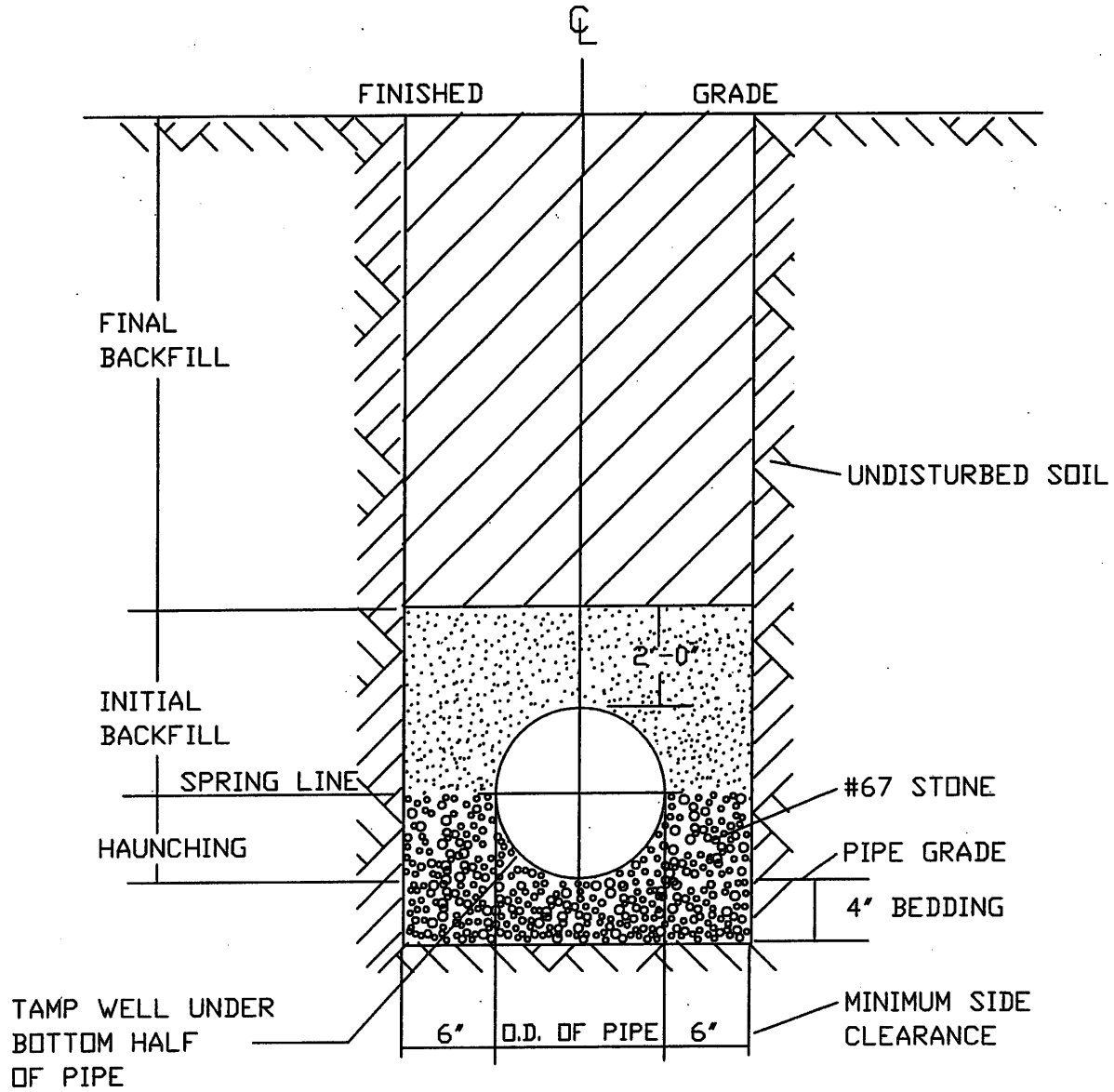

TYPICAL TRENCH BOTTOM DIMENSIONS FOR PVC GRAVITY PIPE

NOTES:

1. For trenches requiring shoring and bracing, dimensions shall be taken from the inside face of the shoring and bracing.
2. No rocks or boulders 4" or larger to be used in initial backfill.
3. All backfill material shall be suitable native material.
4. Backfill shall be tamped in 6" lifts in traffic areas, 12" in non-traffic areas.

PVC SEWER PIPE BEDDING DETAIL		
WALTON COUNTY GEORGIA ESTABLISHED 1818	STANDARD DETAIL – SEWER	
	SCALE: NONE	S-5
	DATE: 08-25-17	

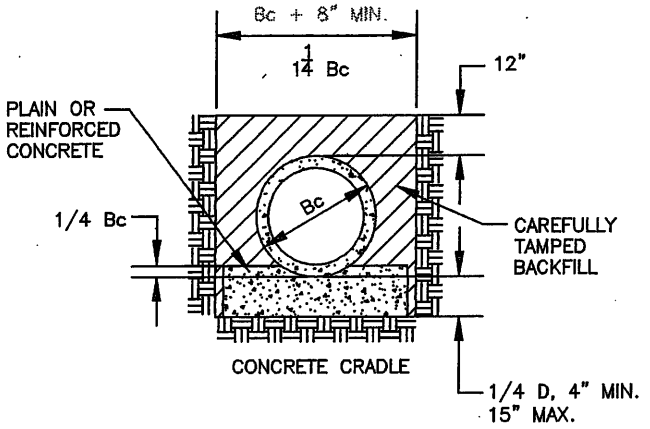

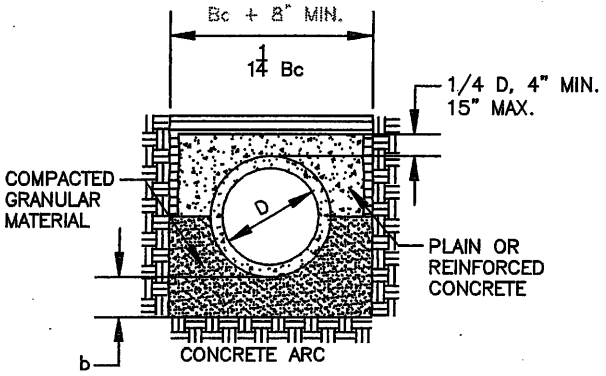

CLASS A

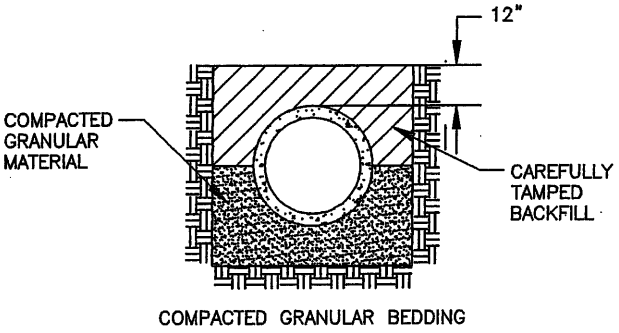

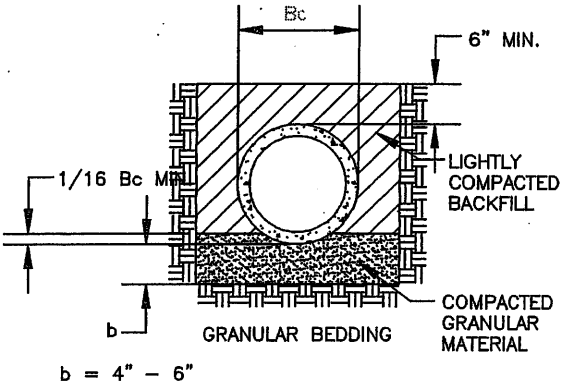

CLASS B

CLASS C

RIGID SEWER PIPE BEDDING DETAIL

N.T.S.

SEWER PIPE BEDDING DETAIL	
WALTON COUNTY GEORGIA ESTABLISHED 1818	STANDARD DETAIL – SEWER
	SCALE: NONE
	DATE: 08–25–17
	S–6

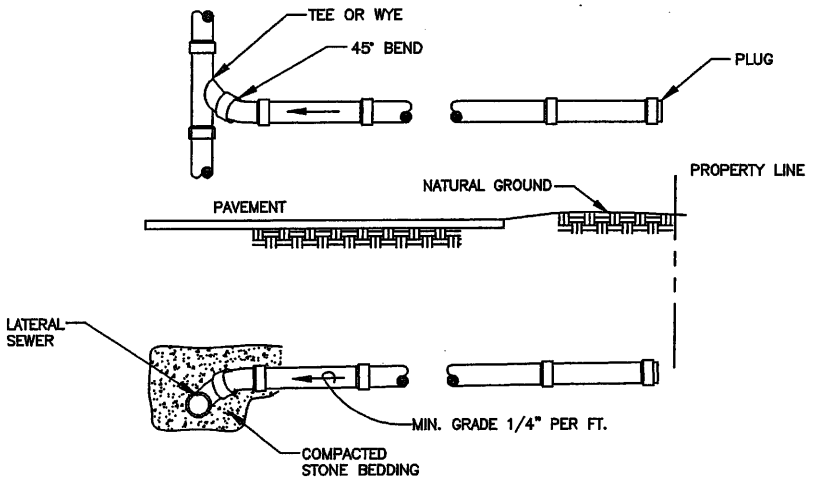

HALF SECTION AT WYE BRANCH

N.T.S.

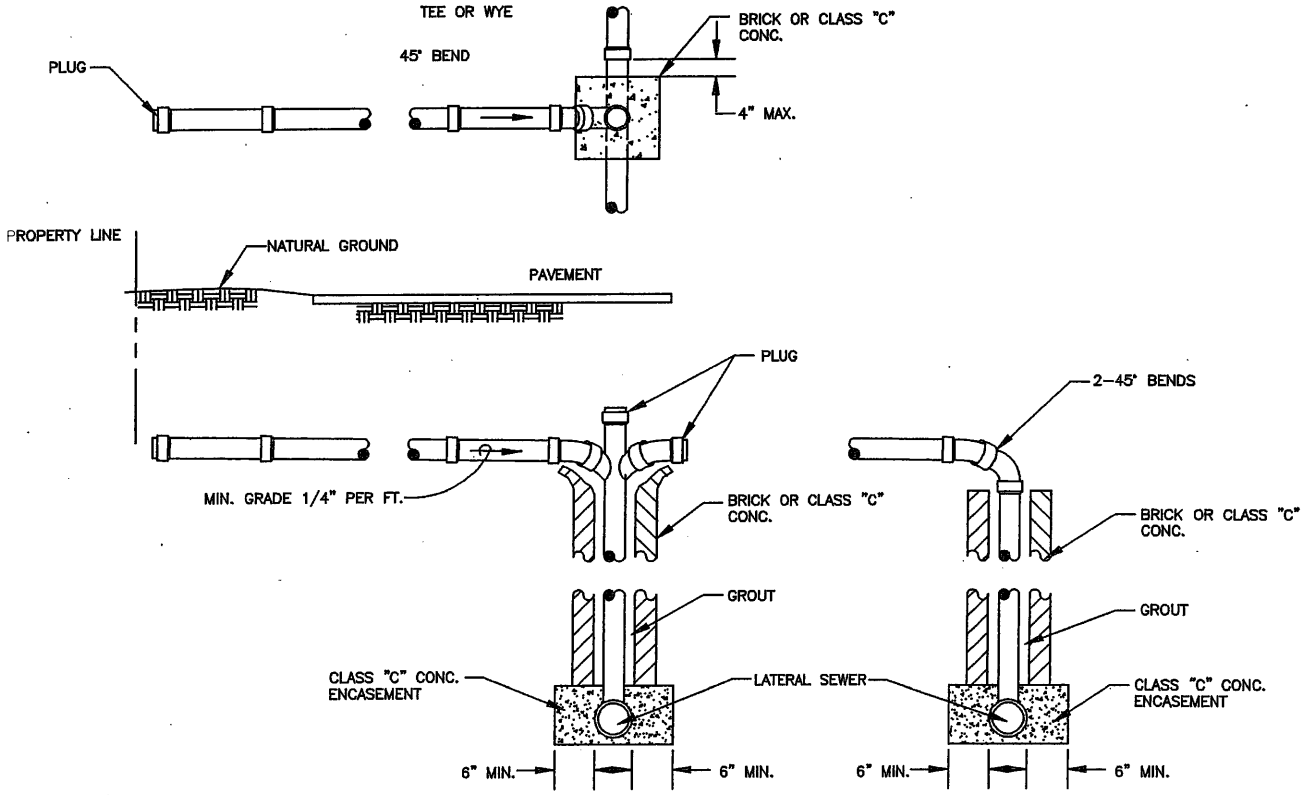

HALF SECTION/AT CHIMNEY RISER

TYPICAL DETAILS OF SANITARY SEWER SERVICE

N.T.S.

TYPICAL SERVICE LATERAL CHIMNEY RISER SERVICE	
WALTON COUNTY GEORGIA ESTABLISHED 1818	STANDARD DETAIL – SEWER
	SCALE: NONE
	DATE: 08-25-17
	S-7

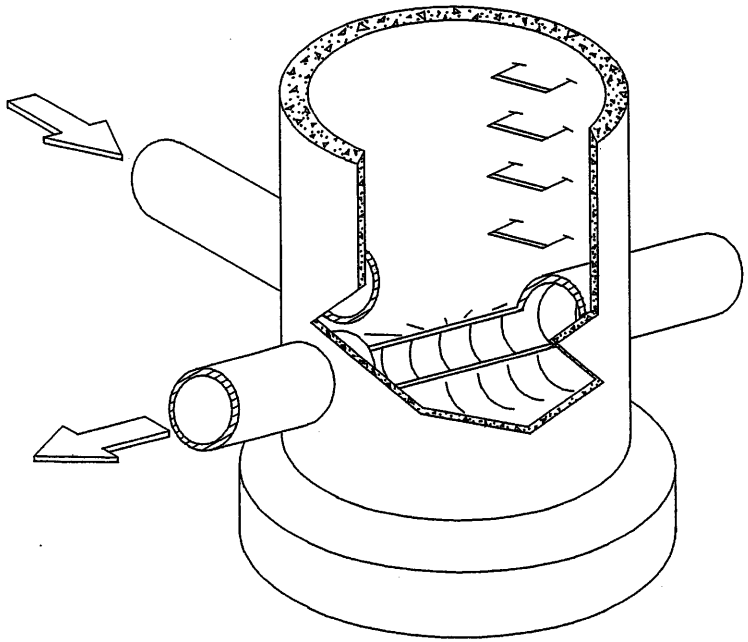

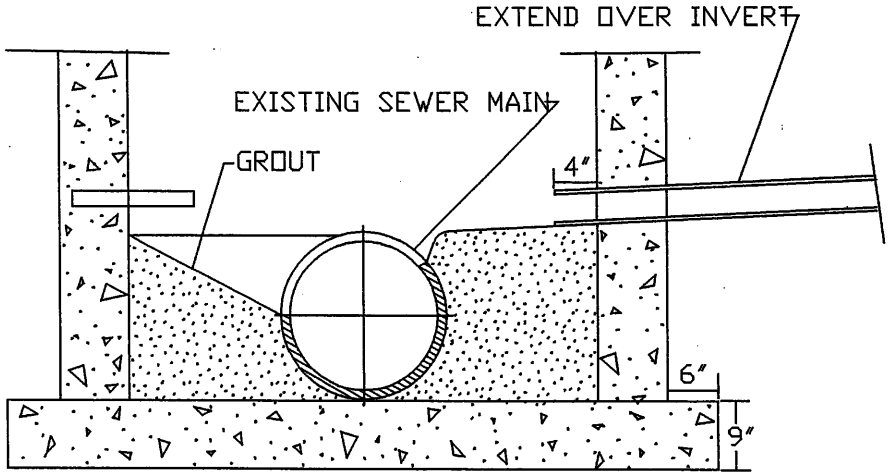

SECTION AT RIGHT ANGLE TO EXISTING MAIN

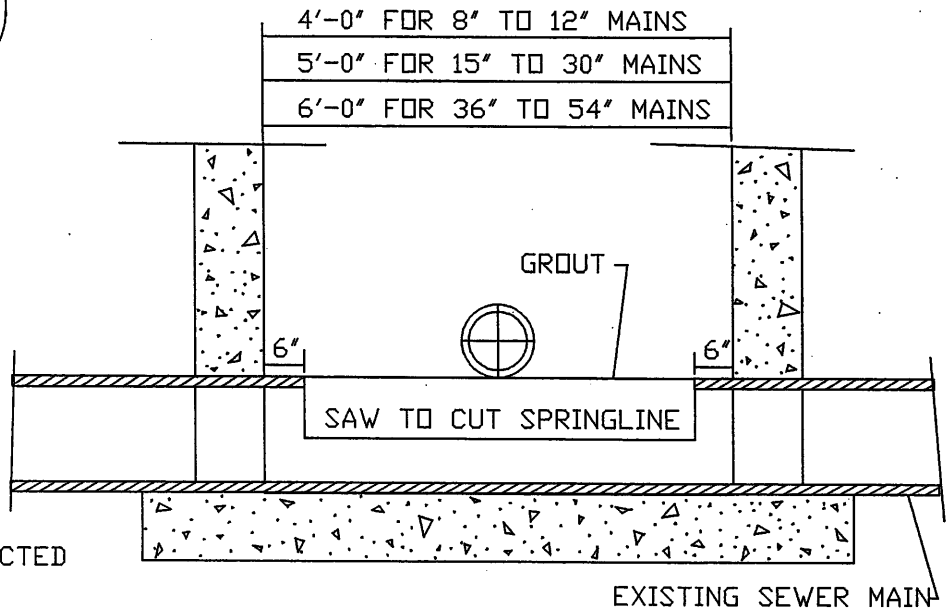

SECTION ALONG CENTERLINE OF EXISTING MAIN

NOTES:

1. FLOW SHALL BE MAINTAINED DURING CONSTRUCTION.
2. THIS DETAIL TO BE USED WHEN A 6" OR LARGER LATERAL NECESSITATES CONSTRUCTION OF A NEW MANHOLE.
3. SEE STANDARD DETAIL FOR PRECAST MANHOLES.
4. THE CONTRACTOR SHALL PROVIDE A MINIMUM 6" COMPACTED # 67 STONE BASE.
5. FOR USE ON DIP AND PVC ONLY.

WALTON COUNTY GEORGIA ESTABLISHED 1818

CUT-IN OR DOGHOUSE MANHOLE

STANDARD DETAIL - SEWER

SCALE: NONE

DATE: 08-25-17

S-8

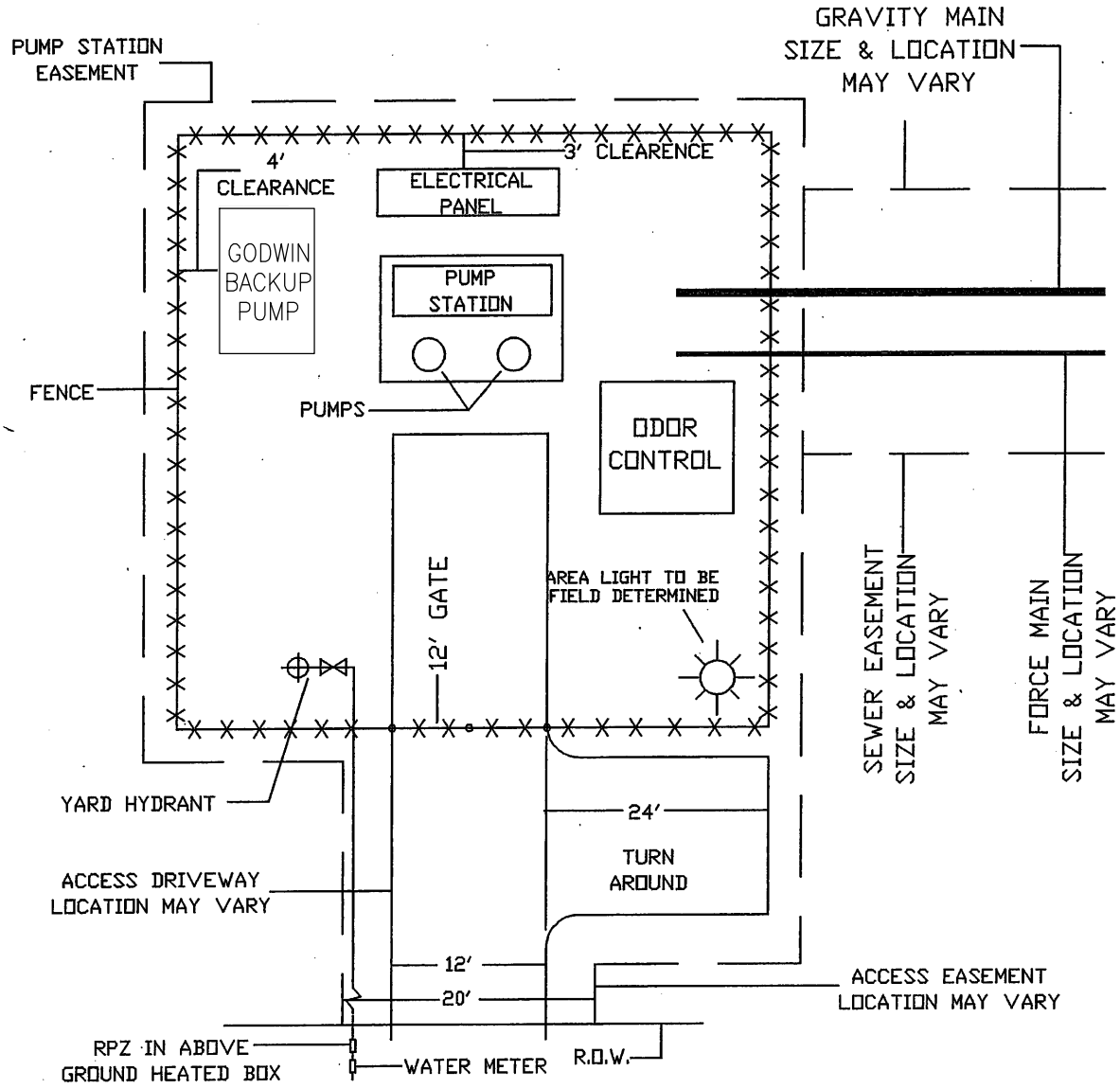

NOTES:

1. PUMP STATION MUST MEET ALL ZONING SET-BACK REQUIREMENTS
2. PUMP STATION MUST MEET ALL LANDSCAPING REQUIREMENTS
3. WATER SRVICE FOR YARD HYDRANT MUST HAVE BACKFLOW PROTECTION. SIZE OF SRVICE MAY VARY
4. PUMP STATION EASEMENT TO BE 50'x 50' MINIMUM
5. EQUIPMENT LOCATIONS MAY VARY

TYPICAL LIFT STATION SITE PLAN	
WALTON COUNTY GEORGIA ESTABLISHED 1818	STANDARD DETAIL – SEWER
SCALE: NONE	S-9
DATE: 08-25-17	

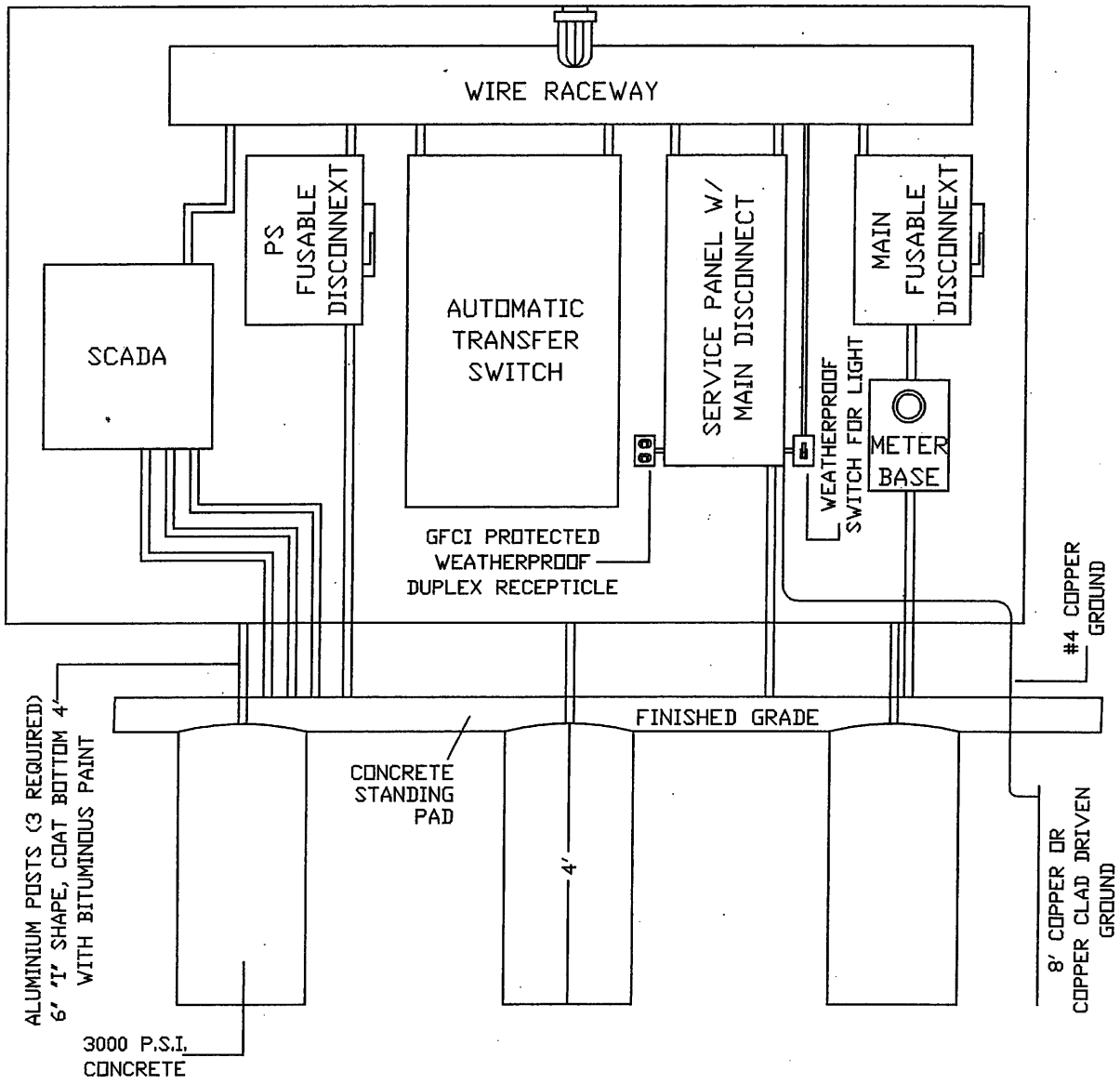

NOTES

1. BACKING PLATE TO BE 1/4" ALUMINUM. MOUNT TO "I" BEAM POSTS WITH STAINLESS STEEL NUT, BOLTS, AND WASHERS.
2. ALL ELECTRICAL WORK SHALL CONFORM TO LATEST NATIONAL, STATE AND LOCAL CODES AND REQUIREMENTS.
3. SHOW CONDUIT SIZE AND NUMBER WITH WIRE SIZE AND NUMBER ON PUMP STATION PLANS.
4. PANEL LAYOUT IS SCHEMATIC ONLY. ADJUST AS NEEDED TO ACCOMMODATE EQUIPMENT.
5. ALL ENCLOSURES SHALL BE NEMA 4 RATED AND LOCKABLE.
6. ENCLOSURES SHALL BE MOUNTED TO ALUMINUM BACKING PLATE WITH NYLON SPACERS & STAINLESS STEEL NUTS, BOLTS & WASHERS.
7. ALL CONDUITS SHALL BE SEALED TO PREVENT MOISTURE, SEWER GASES, ETC. FROM ENTERING EQUIPMENT ENCLOSURES.
8. NO EQUIPMENT SHALL BE MOUNTED LESS THAN 36" ABOVE FINISHED GRADE.

TYPICAL LIFT STATION CONTROL PANEL	
WALTON COUNTY GEORGIA ESTABLISHED 1818	STANDARD DETAIL – SEWER
	SCALE: NONE
	DATE: 08-25-17
	S-10

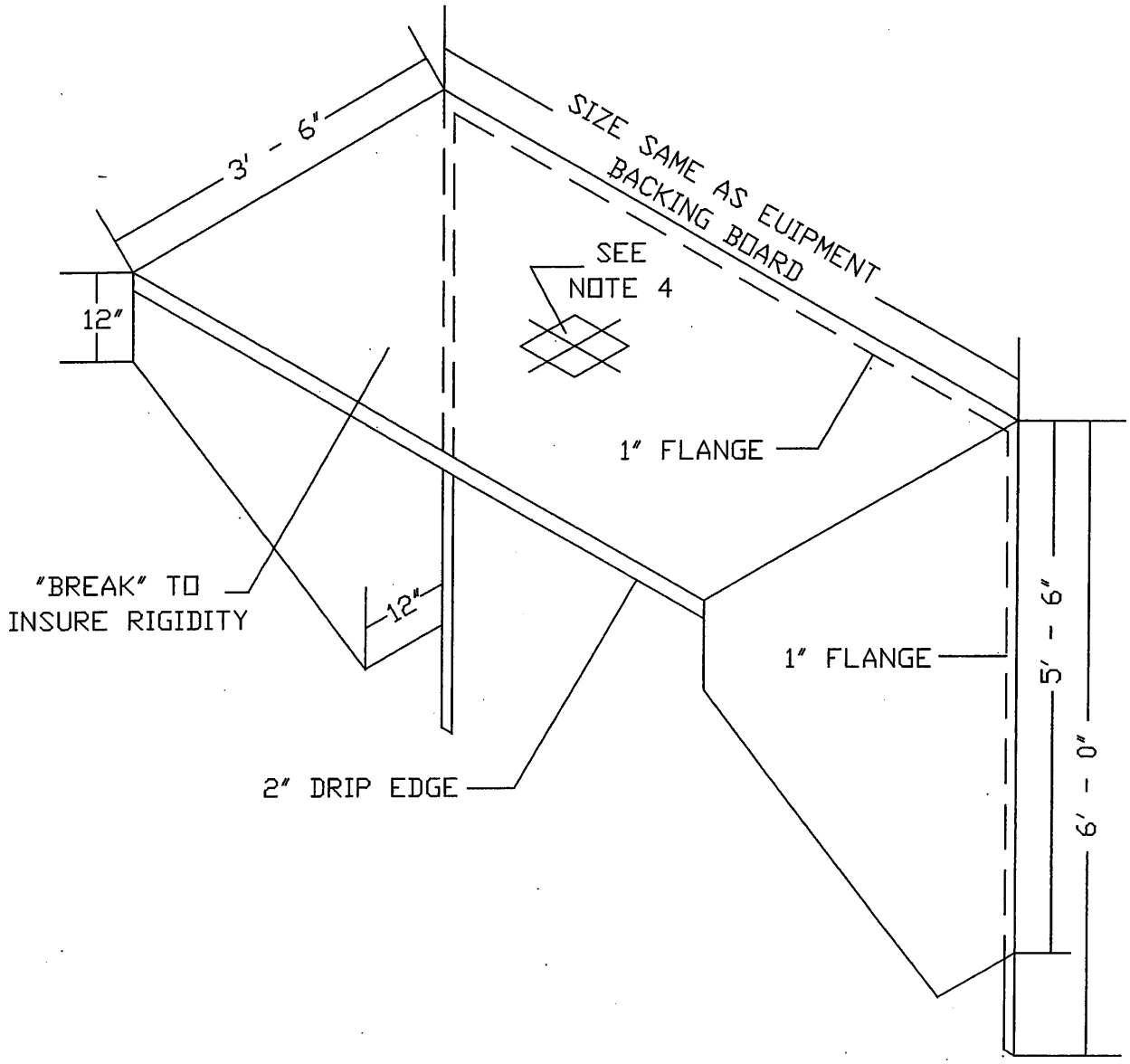

NOTES:

1. HOOD TO 12 Ga. MILL FINISH ALUMINIUM
2. HOOD TO BE HELIARC "STITCH" WELDED TO 1/4" ALUMINIUM PLATE EQUIPMENT BACKING BOARD
3. HOOD SHALL BE SAME WIDTH AS ALUMINIUM PLATE EQUIPMENT BACKING
4. PROVIDE MOUNTING TABS FOR WORK LIGHT BOX

WEATHER HOOD FOR LIFT STATION CONTROL PANEL	
WALTON COUNTY GEORGIA ESTABLISHED 1818	STANDARD DETAIL – SEWER
	SCALE: NONE
	DATE: 08-25-17
	S-11

THRUST BLOCKING

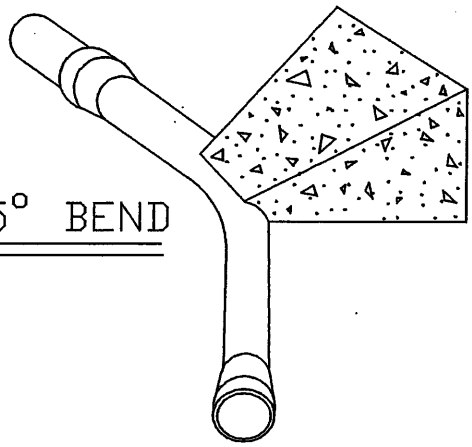

45° BEND

TEE INTERSECTION

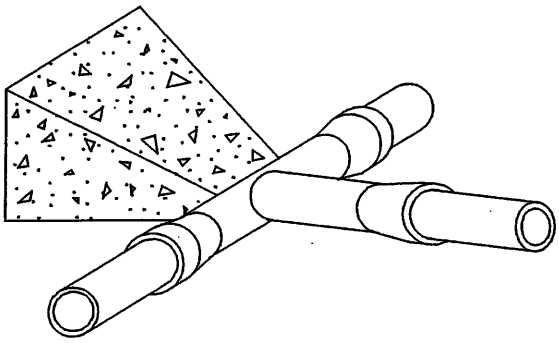

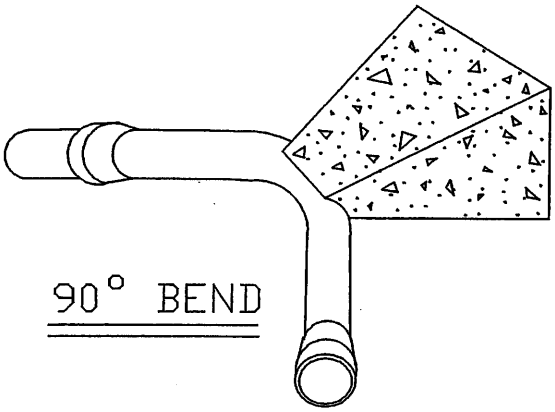

90° BEND

COMPACT TYPE DUCTILE IRON BENDS	SIZE (IN)	DIM A (FT)	DIM B (FT)	MIN. VOLUME (CU. YARDS)
11-1/4 DEGREE	6	2.0	1.0	0.07
	8	2.0	1.0	0.07
	10	2.0	1.0	0.07
	12	2.5	1.5	0.15
	14	2.5	2.0	0.25
	16	2.5	2.0	0.25
22-1/2 DEGREE	6	2.0	1.0	0.07
	8	2.0	1.5	0.07
	10	2.0	2.0	0.10
	12	3.0	2.0	0.20
	14	3.5	2.5	0.40
	16	3.5	3.0	0.50
45 DEGREE	6	2.0	1.5	0.07
	8	2.5	2.0	0.10
	10	3.5	2.5	0.30
	12	3.5	3.0	0.40
	14	4.0	3.5	0.60
	16	5.0	4.0	1.50
90 DEGREE	6	2.5	2.0	0.15
	8	3.0	3.0	0.40
	10	4.5	3.0	0.80
	12	5.0	4.0	1.25
	14	5.5	5.0	1.80
	16	6.5	5.5	3.00
TEES AND PLUGS	6	2.5	1.5	0.10
	8	3.3	2.0	0.30
	10	4.0	2.5	0.50
	12	4.5	3.5	1.00
	14	5.0	4.0	1.50
	16	5.0	5.0	1.80

NOTES:

1. CONCRETE SHALL BE 3000 PSI
2. CONCRETE SHALL NOT CONTACT BOLTS OR ENDS OF MECHANICAL JOINT FITTINGS.
3. TRENCHES SHALL CONFORM TO STANDARD DETAILS
4. ALL BENDS AND INTERSECTIONS SHALL HAVE CONCRETE THRUST BLOCKING.

THRUST BLOCKING

WALTON COUNTY GEORGIA ESTABLISHED 1818

STANDARD DETAIL – SEWER

SCALE: NONE

DATE: 08-25-17

S-12

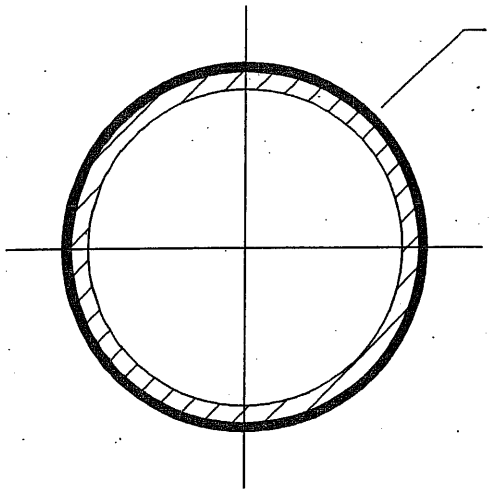

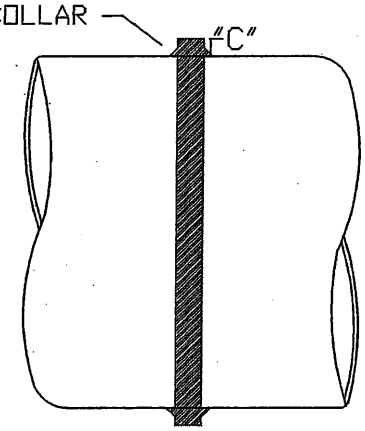

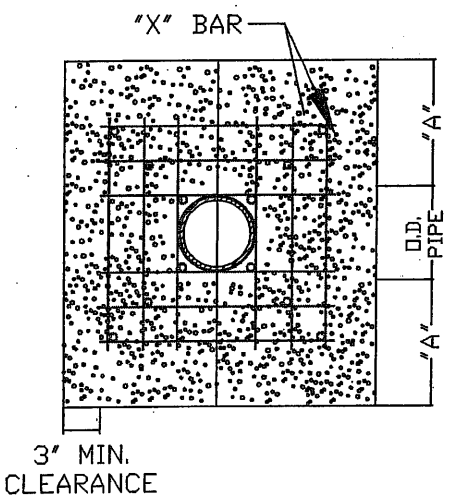

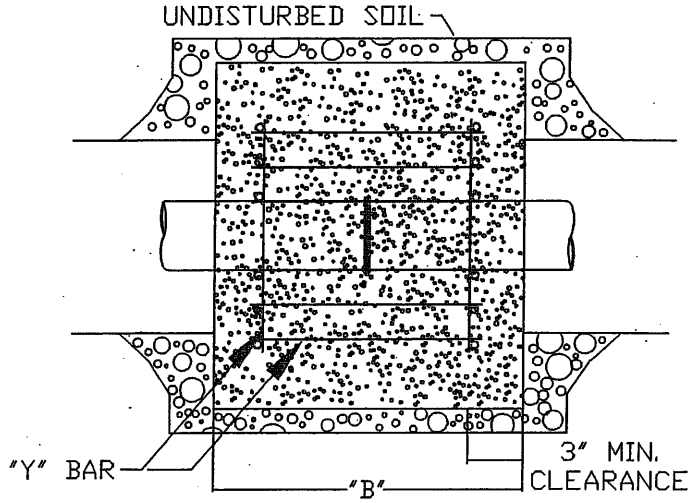

REINFORCING REQUIREMENTS

I.D. PIPE	REBAR SIZE	"X" BAR LENGTH	"X" BAR WEIGHT	"Y" BAR LENGTH	"Y" BAR WEIGHT	NO. REQUIRED
6" - 36"	#5	2'-2"+ O.D. PIPE	1.043 LBS/FT	1'-1"	1.1 LBS. EACH	X-24, Y-12
48" & greater	#6	3'-0"+ O.D. PIPE	1.502 LBS/FT	1'-3"	1.9 LBS. EACH	X-24, Y-12

THRUST COLLAR, AND THRUST SCHEDULE

I.D. PIPE	"A"	"B"	"C-6"-16", 20"-24", 30"-36", 48"
6" - 36"	1'-4"	1'-7"	2" 3" 4"
48" & greater	1'-8"	1'-9"	6"

NOTES:

1. CONCRETE SHALL BE 3000 PSI AND TRANSIT MIXED.
2. REINFORCING BARS SHALL BE DEFORMED AND TIED TOGETHER.
3. TRENCH BOTTOM WIDTH IN VICINITY OF THRUST BLOCK INSTALLATION SHALL BE THE MINIMUM WIDTH
4. BACKFILL TAMPED IN 6" LIFTS
5. THRUST COLLAR MUST BE FACTORY WELDED ON BOTH SIDES ALONG BOTH EDGES OF COLLAR AROUND CIRCUMFERENCE.

CONCRETE COLLAR

WALTON COUNTY GEORGIA ESTABLISHED 1818

STANDARD DETAIL – SEWER

SCALE: NONE

DATE: 08-25-17

S-13

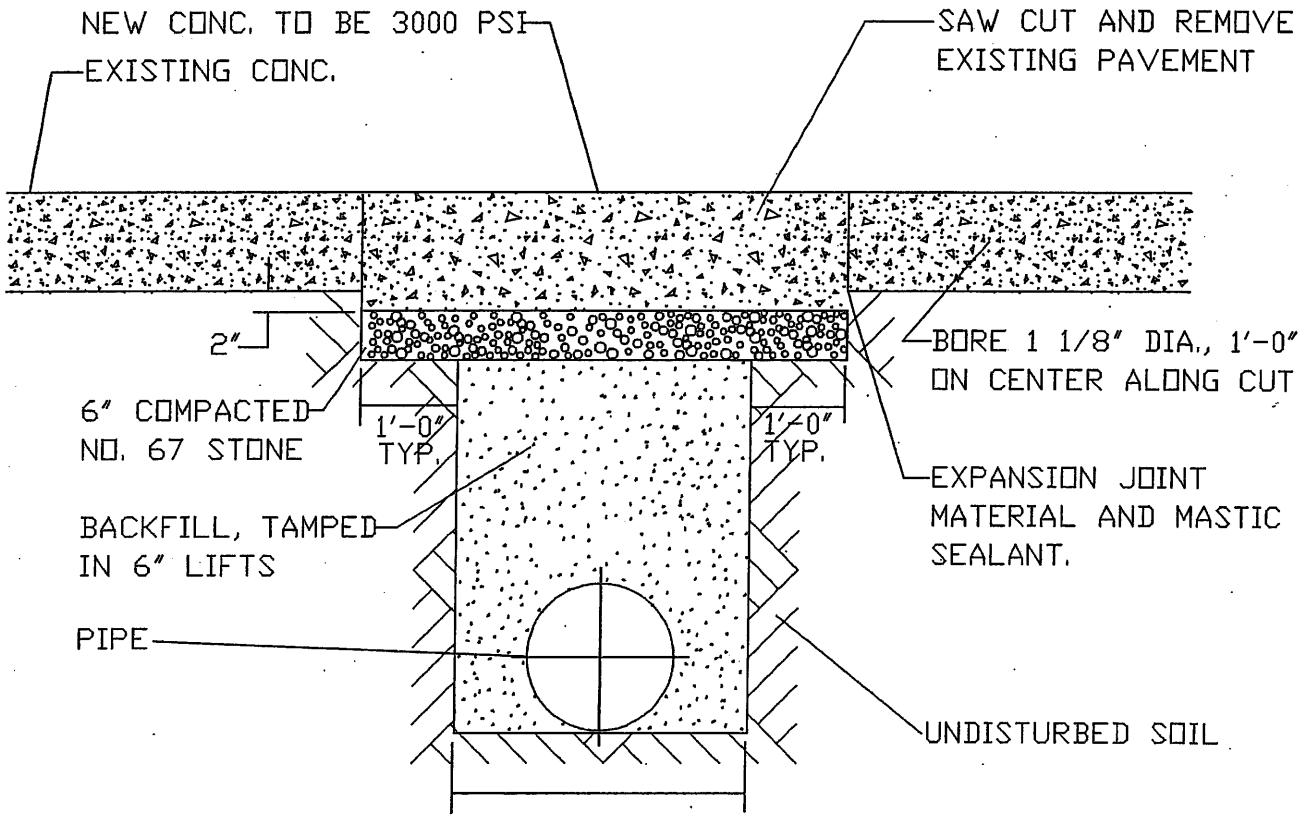

STANDARD CONCRETE PATCH

STANDARD DETAIL – SEWER

SCALE: NONE

DATE: 08-25-17

S-14

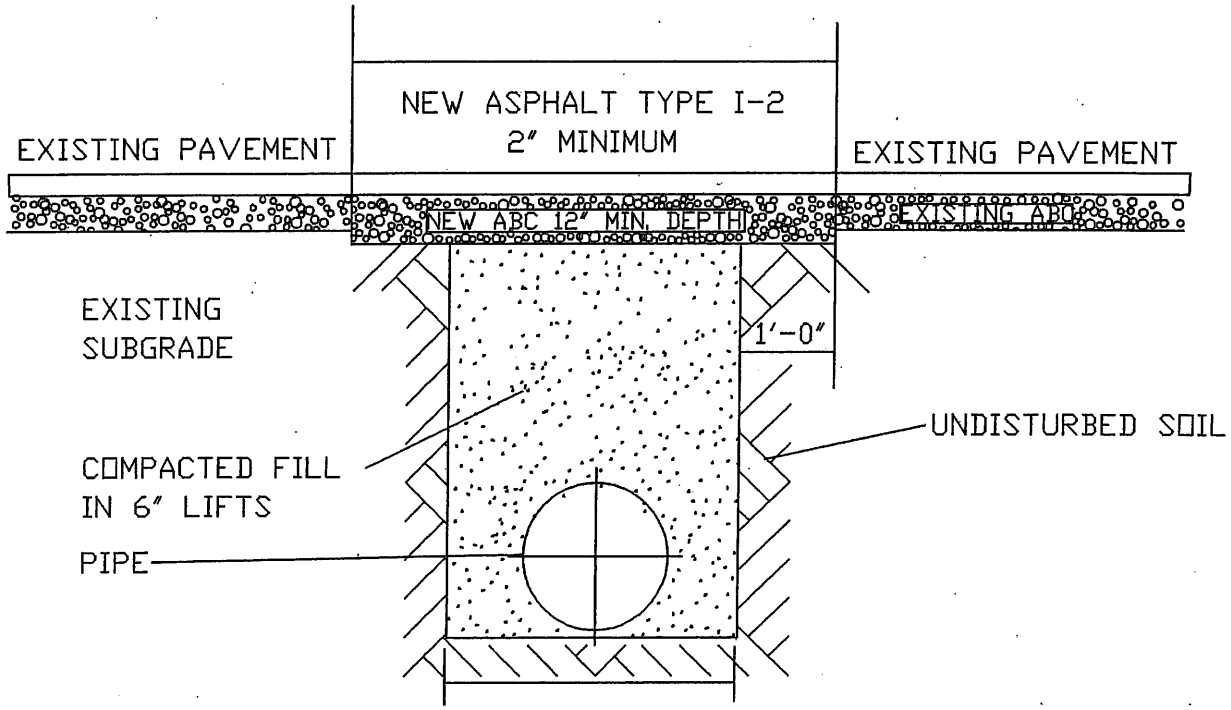

NOTES:

1. The pavement cut shall be defined by a straight edge preferably a machine saw cut.
2. The trench subgrade material shall be backfilled with suitable material and compacted to a density of at least 95% of that obtained by compacting a sample of the material in accordance with AASHTO T-99.
3. The final 1' of fill shall consist of ABC material compacted to a density equal to 100% of that obtained by compacting a sample of the material in accordance with AASHTO T-80.
4. The entire thickness and vertical edge of cut shall be tacked.
5. The same depth of pavement material which exists shall be reinstalled, but in no case shall the asphalt be less than 2" thick.
6. The asphalt pavement material shall be installed and compacted thoroughly to achieve a smooth level patch.

ASPHALT PAVEMENT PATCH	
WALTON COUNTY GEORGIA ESTABLISHED 1818	STANDARD DETAIL – SEWER
	SCALE: NONE
	DATE: 08-25-17
	S-15

(BLANK SHEET FOR PART V TABBED DIVIDER)