Walton County Planning and Development
Building Inspections
303 S Hammond Drive Suite 98
Monroe GA 30655
770-267-1485 Fax: 770-267-1407

Information and Building Permit Application for Residential Construction

Includes:

Guidelines for obtaining a Building Permit

Permit Application

Contractor Affidavits

Inspection Requirements

How to Request an Inspection

Driveway Requirements

Enforced Building Codes

Inspection Request Procedures

For inspections, call 770-267-1485, option 1. All inspection requests must be called in by 3:00 p.m. on a work day to be scheduled for an inspection on the next work day.

When calling in for an inspection you must have your permit number available.

Anyone purchasing a permit must be in the office by 4:00 p.m.

All contractor affidavits must be submitted at the time of permit purchase.

BUILDING PERMIT FEE: 25 CENTS PER HEATED SQ. FT.

TO OBTAIN A BUILDING PERMIT THE FOLLOWING ITEMS MUST BE COMPLETED AND BROUGHT INTO THE OFFICE:

1. Recorded Warranty deed and recorded plat to property

2. A copy of the Septic tank permit or Final approval from the Health Department (770-267-1430). ***After the septic tank is installed, a copy of the on-site management system Inspection report must be submitted to this department (Final Approval). Pink or Yellow copy with the graph that sketches the septic tank lines. This must be in the file before the final building inspection will be done. ***

3. Energy Code Worksheet* (for **any** heated space).
   ***Affidavit to be turned in when applying for Building Permit**
   ***Compliance Certificate: Copy to permit office before Final/CO inspection and a Permanent certificate shall be posted on or in the electrical distribution panel at the Final/CO inspection.**

4. Cemetery sheet.

5. Completed Building Permit Application

6. Completed Electrical, Plumbing and Heat/Air affidavits
   Must be submitted at time of permit purchase
   ***Must be notarized if a homeowner completes. ***

   {Optional}[A separate form "**Application for Temporary Electrical Power Connection**" may be completed and submitted prior to the electrical "rough in" inspection. Forms may be obtained from this office. (**ORIGINALS ONLY ACCEPTED)**

7. If building off a state highway, we must have a copy of the DOT Driveway PERMIT and/or Final approval (if applicable).

7. If using the public water system (Walton County Water Authority), you must provide a receipt from the Walton County Water Authority for the water meter.

Listed below are the State Codes that are applicable:

GA State Minimum International Residential Code	2012 Edition*, **
GA State Minimum International Gas Code	2012 Edition*
GA State Minimum International Plumbing Code	2012 Edition*
GA State Minimum National Electrical Code	2011 Edition*
GA State Minimum International Energy Conservation Code	2009 Edition*

*With Amendments

**Decks shall be constructed in accordance with the Georgia Amendments Prescriptive Deck Details Design Document, which is available to download free from DCA's web page located at: http://www.DCA.GA.GOV/Development/Construction Codes/programs/Codeammendments.ASP

Swimming Pools Must Comply with International Residential Code Appendix G

Permit Cards must remain posted adjacent to the entrance of the property until Final Inspection approval. All Lost or stolen permit cards must be replaced.

INSPECTION PROCEDURES & REGULATIONS
FOR
RESIDENTIAL CONSTRUCTION

***OFFICE HOURS**: 8:00 AM TO 4:00 PM MONDAY THRU FRIDAY.*

INSPECTOR'S PHONE NUMBERS: (BUILDING), Dennis Gamadanis (770) 267-1374, Morgan Wheeler (770)266-1601 (DEVELOPMENT/ROW) RAY JOHNSON (770) 266-1621

TO SCHEDULE *INSPECTIONS: CALL* ***770-267-1485 OPTION # 1 & OPTION #1 AGAIN ONE (1) DAY IN ADVANCE BY 3:00PM*** You **MUST HAVE** your **PERMIT NUMBER** to schedule an inspection. All trade affidavits and other information mailed, faxed or brought into the office ***must*** include your **PERMIT NUMBER**. **All documentation MUST be submitted at least 24 Hours prior to requesting an inspection.**

BEFORE THE FIRST INSPECTION WILL BE DONE:

*****Permit card must be posted at drive, off the right of way. *****

BUILDING LINES MUST BE MARKED. THE PERMIT HOLDER IS RESPONSIBLE FOR MAKING SURE THE PROPERTY LINES AND BUILDING SETBACK LINES ARE CLEARLY MARKED BEFORE THE FIRST INSPECTION WILL BE DONE. SILT FENCE AND EXIT PAD MUST ALSO BE IN PLACE AS DESCRIBED IN THIS HANDOUT.

A MINIMUM $25.00 FEE IS CHARGED FOR REINSPECTIONS.

Walton County does allow third party inspections on concrete work for residential permits only. Ask at the counter for a list of approved third party inspectors.

UTILITIES (Power, telephone, gas, water and cable TV) are buried approximately within the first 13 feet behind the curb and within 13 feet of open ditch. ***You may not alter County right of way without written permission from Walton County.***

MAILBOX STRUCTURES: Need to be constructed no closer than 12 inches back of the curb and within 48 inches from the edge of paving in other locations.

TEMPORARY ELECTRICAL POLES FOR CONSTRUCTION: No Inspection Required.

PERMANENT ELECTRICAL POLES: Inspection Required.
Pole installation must be suitable for long term use.

EXIT PADS: The exit pad must have 4" of stone and must be an effective length but in no case shall it be no less than a minimum of fifty (50) feet long and fifteen (15) feet wide. #3 or #4 stone accepted-no #57 stone.

EROSION CONTROL: Silt fence-For disturbing ¼ acre or less, Type "A" silt fence per 100' is acceptable. For disturbing ½ acre or more, Type "C "silt fence per 100' is acceptable. To ensure proper erosion control, silt fence must be installed properly.

Permit Card Must be Posted

***** At drive, off the right of way. *****

REQUIRED INSPECTIONS:

1- DRIVE WAY CULVERT SIZING AND DESIGN (If applicable).

See Diagram Attached **This must be sized by the Department**

2- PLUMBING IN SLAB INSPECTION – (If applicable)

-Test on drain lines required; can be water test (minimum water test 4' water above highest fitting)
-Inspection required before cover up

3- SLAB/FOOTING INSPECTION -DO NOT POUR CONCRETE BEFORE INSPECTION!

-2 runs of #4 rebar continuous bent around corners, lapped 12 inches and tied unless otherwise specified by engineer
-Pressure treated or rebar grade stakes required
-Mud sill or anchor bolts required on all exterior walls of slab, foundation or basement houses and attached garages

3a- BASEMENT WALLS- ALL WALLS MUST BE ENGINEERED AND INSPECTED BEFORE POURING.

An approved 3rd party engineer can make this inspection or the county inspector can inspect if the engineered drawings are on file.
-Wall height is measured from finished slab floor to the bottom of floor joist above
-Knee walls on top of poured/block walls are considered in wall height

4- ROUGH INSPECTIONS-

(A) Rough Inspections:

(1) Complete rough plumbing installed with required test on water supply and drain lines. All interior sprinkler systems must be installed in accordance with NFPA 13D. (If applicable)

(2) Complete HVAC rough installed. All ducts, vents, furnaces etc. must be in place. Required test on gas lines if applicable.

(3) Complete electrical rough wiring installed. Switch taps and all electrical grounds connected in boxes. Panelboard(s) in place. MLO feeder Panelboard(s) must have the grounds and neutrals connected.

(4) In conjunction with the "ELECTRICAL ROUGH IN" inspection A SEPARATE REQUEST may be made for a "TEMPORARY POWER CONNECTION" inspection.

(B) ROUGH FRAMING INSPECTION-

-Documentation for engineered products may be required.
Call inspection department for details.
-A minimum #15 pound felt paper required under shingles or manufacturers instructions
-Windows and doors must be installed (should be in before any mechanical rough installations).
-Do not insulate.
-All firestops, draftstops in place.
Energy code sealing can be done but is not required for inspection.
-Do not stock building with sheetrock

5- PERMANENT POWER & GAS INSPECTION:

-Electrical installation must be 95% complete
-All general construction must be completed
-Outside decks must be completed.
-Plumbing fixtures need to be installed
-HVAC needs to be completed
-Floor coverings do not need to be installed or finished
-If all items are approved, this office will give approval to the power & gas companies

6- FINAL DRIVEWAY INSPECTION:

-Required prior to issuance of a Certificate of Occupancy of all single-family residential sites **not a part of a curb and gutter subdivision development.**

7- FINAL-CERTIFICATE OF OCCUPANCY INSPECTION:

-All re-inspection fees must be paid at the office before scheduling inspection
-Final septic tank approval must be in office
-Electrical power and gas (if applicable) must be on and working correctly
-All natural and disturbed areas must be stabilized
-Final inspection of premises
-Copy of the Energy Code Compliance Certificate to the Building Permit office and a permanent certificate posted at the electrical distribution panel.
-Certificate of occupancy will be issued upon completion of all the above and the Specific Regulations for Residential Units.

Walton County Planning and Development

Building Department

Procedures for Temporary Permanent Power Connection for Single Family Dwellings

*****This inspection shall be made at the same time with the "ROUGH IN" electrical inspection.**

1) **Application for "Temporary Electrical Power Connection" must be completed and filed with this department a minimum of 24 hours prior to requesting the inspection.**

2) **A SEPARATE REQUEST FOR PERMANENT POWER MUST BE REQUESTED.**

3) The electrical "**Rough in Wiring**" shall be completed and inspection requested.

4) The Electrical Service equipment, Feeder Panelboard(s), Grounding Electrode System and Grounding Electrode Conductor per NEC Article 250 Part C shall be installed.

5) One (1) or more 15 Amp and/or 20 Amp circuit(s) connected with receptacle outlets providing Ground Fault Protection for Personnel.

Building Permit Application

Landowner's name: _____

Current address:_____Phone# _____

City: _____State: _____Zip Code: _____

Construction Address: _____

City: _____State: _____Zip Code: _____

Existing Structures on Property: _____

Lot # / Subdivision: _____

General Contractor: _____**Contact Name:** _____

Phone number:_____ Cell #_____ Fax#_____

Total heated space: _____**sq.ft.**
(Must include FINISHED bonus room)

Bonus Room _____**sq. ft.**
CIRCLE ONE (FINISHED OR UNFINISHED)

First Floor_____**sq.ft. / 2nd Floor**_____**sq.ft.** # Bedrooms_____

Unheated basement: _____**sq.ft.** # Bathrooms_____

Heated basement: _____**sq.ft.** # Other Rooms_____

Unheated attached garage: _____**sq.ft.**

Sidewalks: Circle Yes or No **Curb & Gutter: Circle Yes or No**

Flood Plain: Circle Yes or No **Acreage:** _____

Please circle type of foundation: **Slab** **Crawl** **Basement**

Basement Wall (please write height of wall by appropriate type): **Block**_____ **Poured**_____

Please circle type of fireplace:
Masonry Prefab How many_____ **Power Company:** _____

Please circle type of framing: **Gas Company:** _____
Truss Roof Truss Floor Stick Frame

_____ / _____ / _____
Signature of Applicant Print Name Date

AFFIDAVIT
Compliance with the *Georgia State Energy Code*
International Energy Conservation Code (2009 Edition) with 2011
Georgia State Supplements and Amendments for Residential Dwellings

Walton County
Department of Building Inspections

Notice: This form shall be completed, signed and submitted to the Building Permit Section at the time a building permit is obtained from Walton County, Georgia.

Building Permit Number: _____ Date: _____

Subdivision: _____ Lot: _____

Job Site Address: _____

Contractor/Builder: _____

The 2009 International Energy Conservation Code, published by the International Code Council, when used in conjunction with the Georgia State Supplements and Amendments, shall constitute the official Georgia State Energy Code for Buildings. This Code establishes minimum regulations for energy-efficient design, erection, construction, and/or alteration of both 1 & 2 family dwellings and commercial buildings. For high-rise and non-residential structures, the International Energy Conservation Code with Georgia State Supplements and Amendments adopts by reference American Society of Heating, Refrigeration, and Air Conditioning Engineers (ANSI/ASHRAE/IESNA) Standard 90-1-2007. The designer/builder shall comply with the minimum standards of this Georgia State Energy Code, which are applicable. Compliance with this Energy Code by designers and builders is mandatory. All items shall be completely filled out. "See attached" is not acceptable, approved Energy Code Compliance Tables and Forms shall be listed by title.

I do certify that the above permitted structure shall be built in accordance with the minimum Energy Conservation requirements of the State of Georgia Energy Code for Buildings for 1 & 2 Family Dwelling Buildings using the following method:

Please select one of the compliance methods as follows:

- ❑ GA Table 402.1.1 Insulation and Fenestration Requirements by Component (Walton County is Climate Zone 3).
- ❑ RESCheck See: Georgia Amendment Table 402.1.4 for minimum R-values and maximum U-factors/SHGC allowed in RESCheck.
- ❑ IECC Section 405 Simulated Performance Alternative using: REMRate, Energy Gauge or other locally approved software program.

The following are additional requirements of the 2009 Energy Code as amended by the State of GA:
X Heating and cooling sized per ACCA Manual J and Duct Design per ACCA Manual D with R-8 Ducts in attics (required).
X A permanent certificate per GA Supplement to IECC 401.3 shall be readily accessible and shall be posted on or near the electrical distribution panel or air handler- See Georgia State Supplements and Amendments Appendix D.
X Air Barriers installed on all vertical sides of Insulation (except behind tubs/showers and fire place chase).
X Air Barrier at eaves to prevent "wind washing".
X Building envelope and Duct tightness testing is required. see: 402.4.2.1 Ga Amendment

Indicate with an "X" the following applicable items:

- ❑ Pull down/disappearing stairs in conditioned space weather-stripped and U-0.20 (R-5) see: GA Amendment 402.2.3.
- ❑ Scuttle Hole in conditioned space to attic R-19 See GA Amendment 402.2.3 Weather-stripped access doors.
- ❑ Unvented/sealed crawl space complies with GA Supplements and Amendments 402.2.9 Crawl Space Walls.

List R-value for: Flat CLG R-_____; sloped CLG/RFG R-_____; Wall Cavity R-_____; Sheathing R-_____; Mass Wall Basement (min R-5) R-_____

Attic Knee Wall (Min R-18) R-_____; Floor over unconditioned space R-_____; Is basement conditioned____ Y _____N; slab-on-grade_____ Y____N

Window U-factor _____; Window SHGC_____; Number of stories _____; Heating Efficiency %_____; Cooling Efficiency SEER _____

Any Comments: _____
Signature (Original) _____ Printed Name: _____

Company Name: _____Address: _____ City_____ Zip_____

Date:_____County Staff Signature: _____

Georgia Residential Energy Code Compliance Certificate*

Builder/design Professional:_____ **Phone:** _____

Envelope Summary:

- **List the R-Value for the following components:**

Flat ceiling/roof:_____ **Sloped/vault ceiling:**_____
Exterior wall:_____ **Above grade mass wall:**_____
Attic kneewall:_____ **Attic kneewall sheathing:**_____
Basement stud wall:_____ **Basement Continuous:**_____
Crawlspace stud wall:_____ **Crawlspace Continuous:**_____
Cantilevered Floor:_____ **Floors over unconditioned space:**_____
Other insulation:_____

- **Fenestration Components:**

Window U-factor:_____ **Window SHGC:**_____
Skylight U-factor:_____ **Skylight SHGC:**_____
Glazed Door U-factor:_____ **Opaque Door U-factor:**_____ **(<50% glazed)**

- **Building Envelope Tightness (BET):**

BET test conducted by:_____**Phone**_____
Fan Flow at 50 Pascals =_____**CFM_{50} Total Conditioned Volume =** _____**ft^3**
ACH_{50} = CFM_{50} x 60 / Volume = _____**ACH_{50} (must be less than 7 ACH_{50})**

Mechanical Summary:

Water Heater Energy Factor:_____**Ef Fuel type: ☐ Gas ☐ Electric ☐Other**
Number of Heating and Cooling systems: _____
Heating System Type (choose one):
☐ Gas:_____ **AFUE ☐ Air-Source Heat Pump:** _____**HSPF**
☐ Other: _____ **Efficiency:**_____
Cooling System Type (Standard DX, Heat Pump, Geothermal, etc.):_____
Cooling System Efficiency:_____ **☐ SEER ☐ EER ☐ Other**

Heating/Cooling Load Calculations Performed by:_____**Phone:**_____
Total Heating Load (Based on ACCA Man. J or other approved methodology):_____**Btu/h**
Total Cooling Load (Based on ACCA Man. J or other approved methodology):_____**Btu/h**
Cooling Sensible Load:_____**Btu/h Cooling Latent Load:**_____**Btu/h**
Total Air Handler CFM (based on design calculations):_____**CFM**
Duct Tightness Test Conducted by:_____**Phone:**_____
CFM_{25} per 100 ft^2 of conditioned floor area = CFM_{25} x 100 / Conditioned floor area served

If all ducts are not located within conditioned space, builder must verify that either the post construction duct leakage to outdoors (PCO) is ≤ 8 cfm/100 ft^2, the post construction total duct leakage (PCT) is ≤ 12 cfm/100 ft^2, or the rough-in test (RIT) with air handler installed is ≤ 6 cfm/100 ft^2. State which method was used to conduct the duct tightness test: duct blower (DB), modified blower door subtraction method (MBDS), or automated multipoint blower door (AMBD).

System	Method (DB, MBDS, AMBD)	Test (PCO, PCT, RIT)	CFM25	Area Served (ft2)	Test Result
1					
2					
3					

*Note: This permanent certificate shall be posted on or in the electrical distribution panel. Certificate shall be completed by the builder or registered design professional. Where there is more than one value for each component, certificate shall list the value covering the largest area.

TABLE 402.1.1
INSULATION AND FENESTRATION REQUIREMENTS BY COMPONENT[a]

CLIMATE ZONE	FENESTRATION *U*-FACTOR[b]	SKYLIGHT *U*-FACTOR[b]	GLAZED FENESTRATION SHGC[b]	CEILING[c]	WOOD FRAME WALL[d]	ATTIC KNEEWALL[e]	MASS WALL[f]	FLOOR[g]	BASEMENT WALL[h,k]	SLAB[i]	CRAWL SPACE WALL[j,k]
2	0.50[l]	0.75	0.30	*R*-30 or *U*-0.030	*R*-13 or *U*-0.082	*R*-18 or *U*-0.065	R-4/6 or *U*-0.165	*R*-13 or *U*-0.064	*R*-0 *U*-0.36	R-0	*R*-0 *U*-0.477
3 Walton	**0.50l**	**0.65**	**0.30**	***R*-30 or *U*-0.030**	***R*-13 or *U*-0.082**	***R*-18 or *U*-0.065**	**R-5/8 or *U*-0.141**	***R*-19 or *U*-0.047**	**R-5/13 *U*-0.136**	**R-0**	**R-5/13 *U*-0.136**
4	0.35	0.60	0.30	*R*-38 or *U*-0.025	*R*-13 or *U*-0.082	*R*-18 or *U*-0.065	R-5/10 or *U*-0.141	*R*-19 or *U*-0.047	R-10/13 *U*-0.059	R-0	R-10/13 *U*-0.059

Walton County is Climate Zone 3

For SI: 1 foot = 304.8 mm.

a. *R*-values are minimums. *U*-factors and SHGC are maximums. *R*-19 shall be permitted to be compressed into a 2 × 6 cavity. Non-fenestration *U*-factors shall be obtained from measurement, calculation or an approved source.

b. The fenestration *U*-factor column excludes skylights. The SHGC column applies to all glazed fenestration, including doors 50 percent or more glazed. One door or window (or up to 15 square feet [1.4 m2] of glazed fenestration) may be exempt from meeting the *U*-factor and SHGC (Does not apply to attic access doors) See Section 402.2.3 'Fenestration access hatches and doors' of these Georgia State Supplements and Amendments.

c. Ends and sides of ceiling joist cavity shall be blocked with an approved air barrier. Flat ceiling insulation shall be in substantial contact with the ceiling. Ceiling areas without attic space in Climate Zone 4 may be *R*-30 (maximum of 20 percent of ceiling area or 500 square feet, whichever is less). For HVAC platform and floored access path areas, refer to Section 402.2.1 'Ceilings with attic spaces' of these Georgia State Supplements and Amendments.

d. All vertical air-permeable insulation shall be in substantial contact with an air barrier on all six (6) sides.

Exception: Unfinished basements and fireplaces (insulation shall be restrained to stay in place).

e. *R*-13 + *R*-5 insulated sheathing, *R*-15 + *R*-3 insulated sheathing, or *R*-19 compressed into a 2 × 6 cavity is deemed to meet *R*-18 minimum requirement. Attic side shall have a sealed air barrier.

f. The second R-value applies when more than half the insulation is on the interior side of the mass wall.

g. Floor insulation shall be installed to maintain continuous permanent contact with the underside of the subfloor decking, and insulation ends shall be blocked. Cantilevered floors shall be *R*-30 and band area above exterior wall shall be blocked.

h. *R*-5 and R-10 are continuous and *R*-13 is cavity and band. For basements with no direct conditioning, either the floor or all of the basement walls shall be insulated. For basements with direct conditioning, all of the basement walls shall be insulated.

i. Applies to unheated slabs. Heated slabs shall have exterior edge insulated to *R*-5 to a depth of 2 feet (610 mm). Insulation located below grade shall be in compliance with Section 402.2.7.

j. *R*-5 and R-10 are continuous and *R*-13 is cavity and band. See Section 402.2.9 'Crawl Space Walls' of these Georgia State Supplements and Amendments.

k. Consideration should be given for mold and moisture, and for termite inspection and treatment.

l. Where impact rated fenestration is required under Section R301.2.1.2 of the *International Residential Code* or Section 1609.1.2 of the *International Building Code*, the maximum *U*-factor shall be 0.75 in Zone 2 and 0.65 in Zone 3.

(Effective January 1, 2011)

303 S Hammond Drive
Suite 98
Monroe, GA 30655

(770) 267-1485
(770) 267-1407 FAX
(770) 267-1485

Walton County
Planning and Development

Local Government
Chapter 72 Section 36-72-4 Permit required for developing land on which cemetery located.

No known cemetery, burial ground, human remains, or burial object shall be knowingly disturbed by the owner or occupier of the land on which the cemetery or burial ground is located for the purposes of developing or changing the use of any part of such land unless a permit is first obtained from the governing authority of the municipal corporation or county wherein the cemetery or burial ground is located, which shall have authority to permit such activity except as provided in Code Section 36-72-14. (Code 1981, &36-72-4, enacted by Ga. L. 1991, p. 924, & 3.)

_____
(Print name)

_____
(Signature)

Map/Parcel Number: _____

WALTON COUNTY PLANNING AND DEVELOPMENT

FAX (770) 267-1407 INSPECTION REQUESTS 770-267-1485 OPTION # 1

CONTRACTOR AFFIDAVIT

CONTRACTORS MUST BE REGISTERED IN WALTON COUNTY PRIOR TO SUBMITTING AFFIDAVITS

DATE: _____

Permit # _____ Address _____

Permit Name _____

Residential ____ Commercial ____

==========

ELECTRICAL:

Company/Contractor Name _____ Phone _____

Service size or Type of Installation _____

****Any Electric Permit or Addition to any One & Two Family Dwelling will require Smoke Alarms to be installed per IRC Section R 313.1-313.4.1 with Carbon Monoxide Alarms outside of each Sleeping Area. Any Service Change Will Require Intersystem Bonding Termination & Arc Fault Breakers****

Signature _____ State License # _____

Please Print Name: _____

****If Home Owner--- Signature will need to be Notarized****

Walton County Contractor #CC_____

PLUMBING:

Company/Contractor Name _____ Phone _____

Number of Fixtures:

Water Closets____ Lavatory____ Tub____ Shower____Kitchen Sink____Dishwasher___

Washing Machine____ Water Heater____ Laundry Sink____ Floor Drain____

Drinking Fountain____Service Sink____ Urinal____ Disposal____ Sewer/Septic____

Other_____

By this signature, I also certify that any sprinkler systems installed for One and Two Family Dwellings are in compliance with the current enforced edition of NFPA 13D

Signature _____ State License # _____

Please Print Name: _____

****If Home Owner--- Signature will need to be Notarized****

Walton County Contractor #CC_____

WALTON COUNTY PLANNING AND DEVELOPMENT

FAX (770) 267-1407 INSPECTION REQUESTS 770-267-1485 OPTION # 1

CONTRACTOR AFFIDAVIT

CONTRACTORS MUST BE REGISTERED IN WALTON COUNTY PRIOR TO SUBMITTING AFFIDAVITS

DATE: _____

Permit #_____ Address_____

Permit Name _____

Residential _____ Commercial_____

==========

HEATING & AIR:

Company/Contractor Name_____Phone_____

Type of System _____ Tonnage _____ # of Systems_____

Signature_____ State License #_____

Please Print name_____

****If Home Owner--- Signature will need to be notarized****

Walton County Contractor #**CC**_____

GAS:

Company/Contractor Name_____Phone_____

Number of Items using Gas: Furnace____ Water Heater____ Stove____Dryer___

Refrigerator____ Other_____

Signature_____ State License #_____

Please Print Name_____

****If Home Owner--- Signature will need to be notarized****

Walton County Contractor #**CC**_____

RESIDENTIAL DRIVEWAY PERMIT REQUEST

Property Owner: _____

Contact Name: _____ Phone # _____

House Permit Number: _____

Tax Map: _____ Road Name _____

Directions to property: _____

_____

_____

Subdivision and Lot Number: _____

1. Stake the location of your driveway by using the red tags given to you by the Code Office. Please call our inspection request line with your permit number (if applicable) to schedule an inspection for the culvert pipe. The inspector will go out and size the culvert pipe.

2. The exit pad must have **4"** of stone and must be a minimum of fifty (50) feet long or back to R.O.W. and fifteen (15) feet wide and silt fence must also be in place by the first inspection (earlier if necessary). **Driveway aprons shall be constructed so as to provide a minimum slope of ¼" per foot away from the edge of pavement of the public street.**

3. The culvert **MUST** be located within the right-of-way of the road; it can be tar-coated or aluminized pipe.

4. **Absolutely NO headwalls, brick mailboxes, trees or other potentially hazardous road obstruction will be allowed on the Right-of-Way.**

The finished driveway must be swailed at the Right-of-Way at the ditch to divert the water into the ditch not the road/street.

6. **Final Driveway Inspection:** Required prior to issuance of a Certificate of Occupancy of all single-family residential sites not a part of a curb and gutter subdivision development.

_____ / _____ / _____

Signature **Print name** **Date**

INSPECTOR USE ONLY

Pipe Diameter _____ inch Pipe Length _____ feet

Remarks: _____

_____

Inspected By: _____ Date: _____

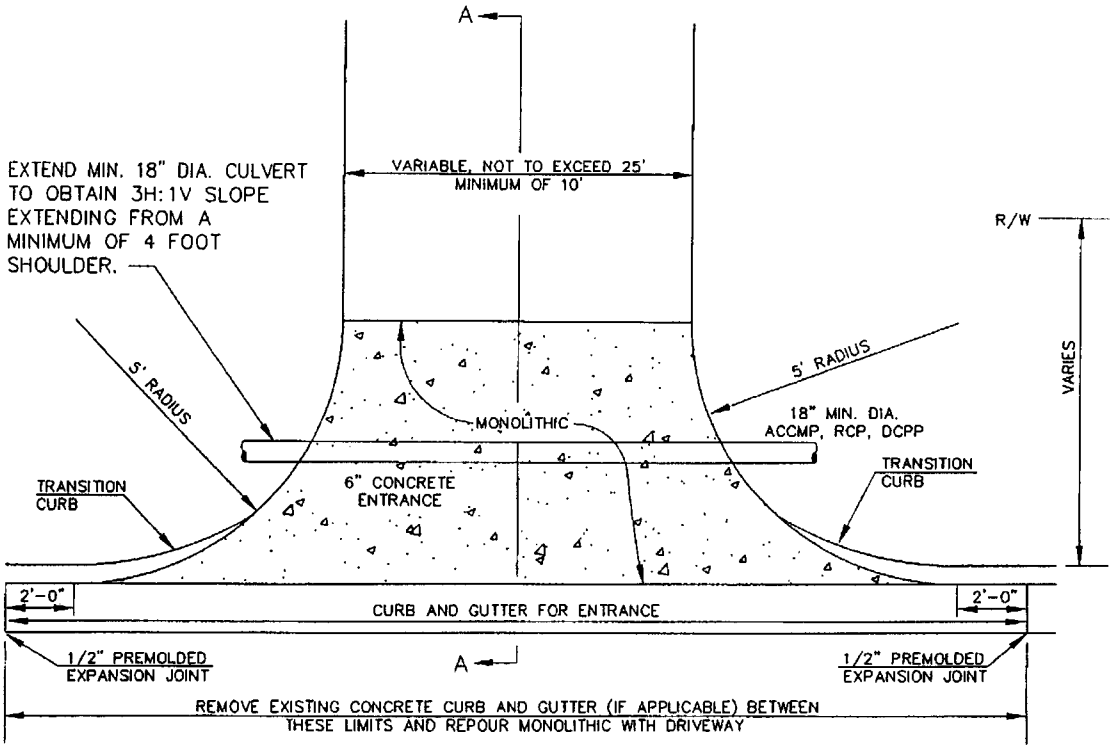

PLAN

NOTE: ALL CONCRETE TO BE 3000 PSI. MINIMUM.

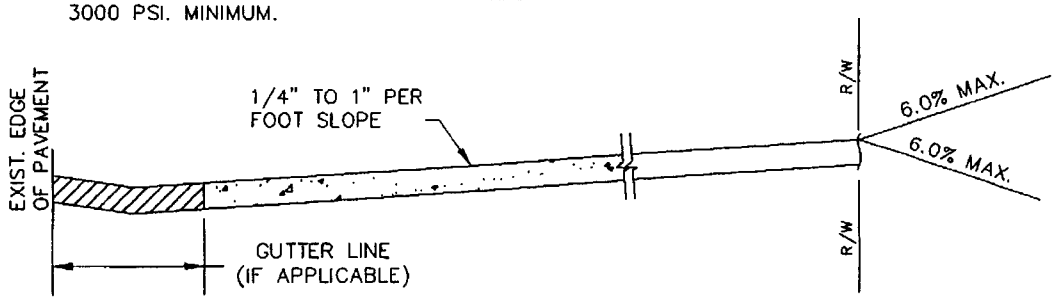

SECTION A–A

NOTE: INSTALL MIN. 18" DIAMETER CULVERT AT LOW POINT OF DRIVEWAY, AS REQUIRED BY WALTON COUNTY.

WALTON COUNTY	STANDARD DESIGN AND CONSTRUCTION DETAILS	
	RESIDENTIAL DRIVEWAY With Curb + Gutter	3.16

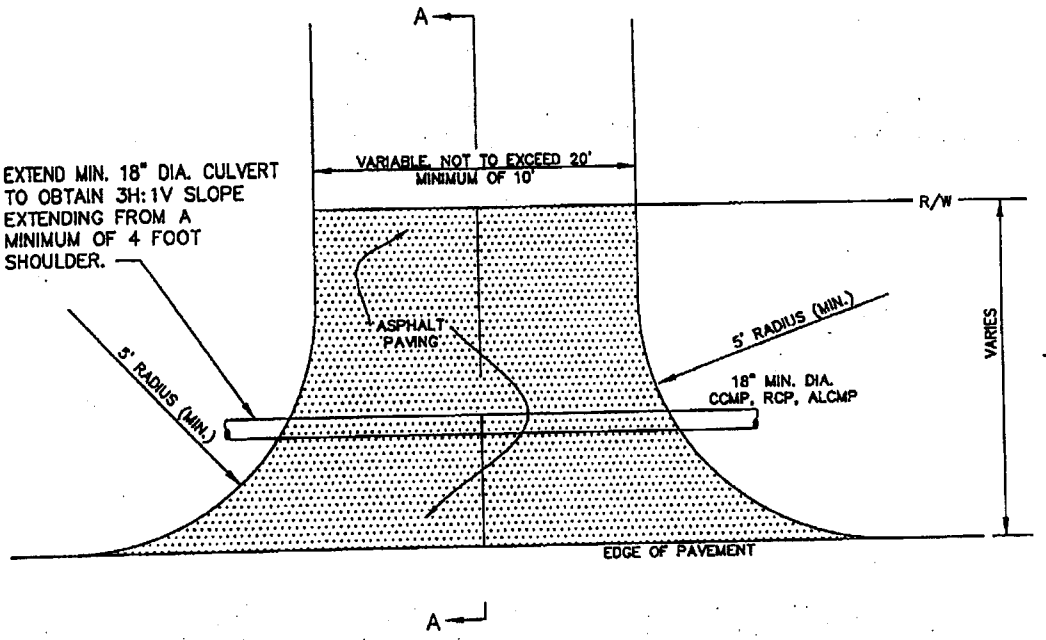

PLAN

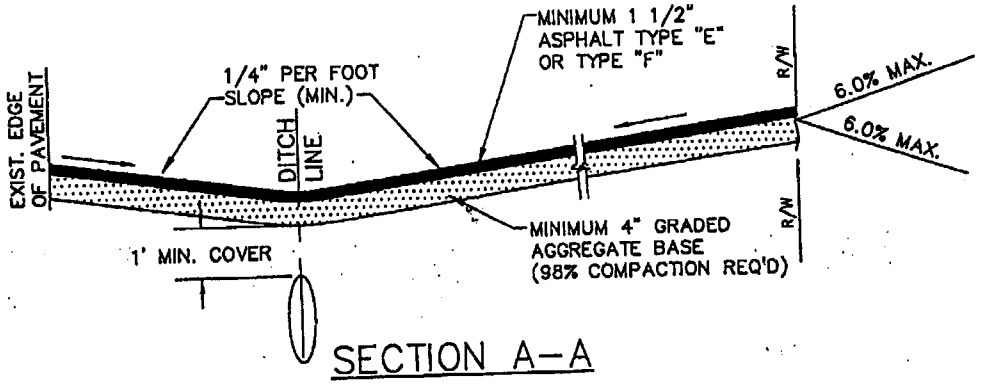

SECTION A–A

NOTES: 1. INSTALL MIN. 18" DIAMETER CULVERT AT LOW POINT OF DRIVEWAY, AS REQUIRED BY WALTON COUNTY.
2. WHERE NO DITCH LINE EXISITS, THE DRIVEWAY GRADE SHALL DROP 1/4" PER FOOT FOR A MINIMUM DISTANCE OF 12 FEET FROM THE EDGE OF PAVEMENT.

WALTON COUNTY	STANDARD DESIGN AND CONSTRUCTION DETAILS	
	RESIDENTIAL DRIVEWAY - RURAL	3.16a

WCD02CDR.... 10.01.03

CMORRIS

State Licensing Board for
Residential and General Contractors

Authorized Permit Agent Form

License verification by permitting office should be completed by visiting sos.ga.gov/plb/

Licensed Contractor: _____Individual _____Qualifying Agent

Name of licensed person _____

*Please attach a copy of Individual license or Company License (Reflects company and qualifying agent license number)

License number of individual or qualifying agent: _____

Name of licensed company(if applicable)_____

License number of company(if applicable):_____

I, _____, hereby designate
Licensed Individual or Qualifying Agent

_____ to apply for and obtain the permit(s) for the
*Please attach a copy of the authorized permit agent's driver's license.

project at:

_____
Street address

_____
Apartment or Suite Number

_____
City Zip Code

I, the undersigned, being the contractor as either an individual or a qualifying agent, do hereby affirm and swear, under oath, that all information on this form and on accompanying documents are true and correct.

Signature of individual or qualifying agent _____

State of _____ County of _____

Subscribed and sworn to before me this _____ day of _____
20__

Signature of Notary Public_____ Seal

237 Coliseum Drive • Macon, Georgia 31217 • (478) 207-2440
www.sos.state.ga.us