303 S Hammond Drive
Suite 98
Monroe, GA 30655

(770) 267-1485
(770) 267-1407 FAX
(770) 267-1485 Insp. Request

Walton County Planning and Development
Building Department

Information and Building Permit

Application for

Manufactured Housing

Includes:

Guidelines for obtaining a Building Permit

Permit Application

Contractor Affidavits

Inspection Requirements

How to request an Inspection

Driveway Requirements

Enforced Building Codes

WALTON COUNTY PLANNING AND DEVELOPMENT

303 S HAMMOND DRIVE SUITE 98 MONROE, GA 30655
(770) 267-1485 FAX (770) 267-1407

MANUFACTURED HOMES

****ANY POSSIBLE FLOOD AREA-SEE ARTICLE 3, SECTION B OF THE WALTON COUNTY FLOOD DAMAGE PREVENTION ORDINANCE****A SITE PLAN MAY BE REQUIRED******
MANUFACTURED HOME PERMIT FEE IS .15 PER SQ. FT.

TO OBTAIN A MANUFACTURED HOME PERMIT THE FOLLOWING ITEMS MUST BE BROUGHT INTO THE OFFICE:

1. Recorded warranty deed and recorded plat to property. (**MUST** be legible)

2. Tax Assessors form. (To be filled out by Tax Assessors office)

3. Septic tank approval from the Health Department (770-267-1430).
   * When septic tank is installed, we need a copy of the on-site sewage management system inspection report. (Pink or yellow copy with the graph that sketches the septic tank line.) This must be in the folder before the final inspection can be done. *

4. Manufacturer, make, model, size, & serial number of manufactured homes. All manufactured homes must be underpinned with block, rock, or brick.

5. Completed Electrical, Plumbing and Heat/Air affidavits
   Must be submitted at time of permit purchase
   ***Must be notarized if a homeowner completes. ***

6. If building off a state road, we must have a copy of the DOT PERMIT and final approval.

7. If using public water, you must provide a receipt from the Walton County Water Authority for the water meter.

8. If located in a mobile home park you do not need the recorded deed and plat. You need to bring a notarized letter from the park owner which states that you have permission to place a home in the park and what lot number it will be placed on, septic tank approval, and manufacturer, make, model, size, & serial number of your manufactured home.

9. **Affidavit of Licensed Installer.**
   {MUST BE SUBMITTED PRIOR TO THE FINAL INSPECTION}

IMPORTANT INFORMATION REGARDING BUILDING PERMIT

*****Inspections by this department do not relieve the owner & contractor(s) of the responsibility of compliance with all applicable codes and ordinances. It is a misdemeanor to occupy a dwelling/structure without a final inspection and certificate of occupancy. *****

103 PERMITS

103.1 PERMIT APPLICATION

103.1.1 When Required: Any owner, authorized agent, or prime contractor who desires to construct, enlarge, alter, repair, move, demolish, or change the occupancy of a building or structure, or to erect, install, enlarge, alter, repair, remove, convert or replace any electrical, gas energy conservation, mechanical or plumbing system, the installation of which is regulated by this Code, including the technical codes, or to cause any such work to be done, shall first make application to the Department of Planning and Development, Building Construction Section, and obtain a building permit for the work being done after paying required fees.

It shall be unlawful to commence the excavation or filling of any lot for construction of any building or commence the moving or alteration of any building until the Planning and Development Office has issued a building permit for such work.

It shall be unlawful for any building to be located, erected, moved, added to or structurally altered if the value of the improvement is in excess of two thousand five hundred dollars ($2,500) building or alteration cost without obtaining a building permit issued by the Planning and Development Office. No building permit shall be issued except in conformity with the provisions of this ordinance.

A copy of the filed deed, filed plat must be submitted to the Planning and Development Office before a building permit may be issued.

103.1.3 Work Authorized: A building, electrical, gas, mechanical or plumbing permit shall carry with it the right to construct or install the work, provided the same are shown on the drawings and set forth in the specifications filed with the application for the permit.

103.1.4 Minor Repairs: Ordinary minor repairs under $600.00 in total cost may be made, with the approval of the Building Official without a permit, provided that such repairs shall not violate any of the provisions of this Code, including the technical codes.

103.1.5 Information Required: Each application for a permit, with the required fee, shall be filed with the Department of Planning and Development on a form furnished for that purpose, and shall contain a general description of the proposed work and its location. The application shall be signed by the owner, or his authorized agent.

103.1.6 Time Limitations:

1. Plans and Specifications

   Plans and specifications for projects reviewed by the Building Official and the Department of Planning and Development shall be permitted within six (6) months of the formal review date to be valid for obtaining a building permit or the project shall be deemed to have been abandoned.

2. Building Permits

   a. A building permit shall expire 12 months from issuance if the permittee fails to request and pass a required inspection whether or not construction has been initiated.

   b. A building permit shall also expire if the permittee fails to request and pass a required inspection during any 6 month period after 6 months have passed from the date of permit issuance. Exception: When in the determination of the Building Official, a structure is substantially complete (90% or greater), the building permit shall not expire but shall become inactive and may be renewed by the original permit applicant upon the payment of a renewal fee as established by the Board of Commissioners.

   c. The Building Official is authorized to grant no more than two (2) permit extensions, not to exceed 3 months each, during which time the permittee shall request and pass a required inspection. A request for an extension shall be made prior to permit expiration, shall be in writing and shall demonstrate justifiable cause.

   d. A fee shall be charged for any extension thus granted as authorized by the Board of Commissioners. No refund of the permit fee shall be given for an expired permit unless authorized by the Board of Commissioners. A new permit to re-initiate construction activities shall be secured and a fee shall be charged for the new permit in accordance with the most recent fee schedule established by the Board of Commissioners.

103.7.2 Work Commencing Before Permit Issuance: Any person or firm starting any excavation, or filling of any lot, work on a building, structure, or electrical, plumbing, mechanical, energy conservation and gas systems before obtaining the necessary permit, shall be subject to a penalty of 100% of the usual permit fee in addition to the required permit fees. The payment of such fees shall not relieve any persons from fully complying with the requirements of this Code in the execution of the work nor from any other penalties prescribed herein.

*****OCCUPYING OR STORING OF ANY PERSONAL BELONGINGS IN THE STRUCTURE WITHOUT A FINAL INSPECTION AND APPROVAL MAY RESULT IN A STOP WORK ORDER, A CITATION AND A COURT APPEARANCE.*****

INSPECTION PROCEDURES FOR MANUFACTURED HOMES

***OFFICE HOURS**: 8:00 AM TO 4:00 PM MONDAY THRU FRIDAY.*
***INSPECTOR OFFICE HOURS**: 8:00 to 8:30am and 3:30 TO 3:55 p.m. MONDAY THRU FRIDAY.*

INSPECTOR'S PHONE NUMBERS:
DENNIS GAMADANIS 770-267-1374
(ROW) RAY JOHNSON 770-266-1621

TO SCHEDULE *INSPECTIONS: CALL **770-267-1485 OPTION #1 AND OPTION #1** ONE (1) DAY IN ADVANCE BY 3:00PM* You **MUST HAVE** your **PERMIT NUMBER** to schedule an inspection. All trade affidavits and other information mailed, faxed or brought into the office must include your **PERMIT NUMBER** or the forms will not be placed in your file. **All documentation MUST be submitted at least 24 Hours prior to requesting an inspection.**

A minimum $25.00 FEE is charged for all reinspections.

Federal, State and County Soil Erosion Sedimentation Law will be strictly enforced. By law, a 50-feet undisturbed buffer must be maintained on all creeks, streams, rivers and lakes. Erosion control devices must be in place and maintained throughout construction. If your manufactured home is in a floodplain, wetland or watershed protection area other requirements may be necessary.

Drainage easements recorded on plats cannot be altered without the permission of Walton County.

It is recommended that final grading and stabilization is done as early as possible to avoid delays on the final inspection.

UTILITIES: (Power, telephone, gas, water and cable) are buried within the first 13 feet behind the curb and within 13 feet of open ditch. You may not alter County right of way without written permission from Walton County.

Mailbox Structures: Need to be constructed no closer than 12 inches back of the curb and within 48 inches from the edge of paving in other locations.

Exit Pads: The exit pad must have 4" of stone and must be an effective length but in no case shall it be less than a minimum of fifty (50) feet long and fifteen (15) feet wide.

Required Inspections: ***Walton County does not inspect footings for manufactured homes, but it is the responsibility of the installer to meet all of the required setbacks as stated on the permit. Footings, rough wiring, framing & final inspections are required for attached or detached garages.***

BEFORE ANY INSPECTIONS WILL BE DONE:

Building lines must be marked. The permit holder is responsible for making sure the property lines and building setback lines are clearly marked before the first inspection will be done.

****STEPS 1 & 2 MUST BE COMPLETED BEFORE THE HOME IS DELIVERED.****

1- DRIVE WAY CULVERT SIZING AND DESIGN (If applicable).
See Diagram Attached **This must be sized by the Code Office.**

2- Site Inspection-
Home location must be staked out.

3- Garage Footing Inspection

- **Do not pour concrete before inspection**
- 2 runs of #4 rebar continuous, bent around corners, lapped 12 inches and tied unless otherwise specified by engineer
- -Pressure treated or rebar grade stakes required
- -Mud sill or anchor bolts required on all exterior walls of slab, foundation walls and attached garages
- -Site inspected for erosion control

4- Garage rough in-

- Framing completed and "Dried In"
- Electrical "Rough In" Completed

5- FINAL DRIVEWAY INSPECTION: Required prior to issuance of a Certificate of Occupancy of all single family residential sites that are not a part of a curb and gutter subdivision development.

6- Final Inspection

- All fees must be paid before scheduling inspection. Final septic approval must be in file.
- Test on gas service line (if applicable)
- All natural and disturbed areas must be stabilized.
- Underpinning must be completed
- At every exterior door a self-supporting 3'X3' or larger landing is required.
- Guardrails & handrails are required for landings 30" or higher.
- Crawl space access door & ventilation
- Removal of all organic & decayable material from under home.
- Water & DWV systems connected
- HVAC ductwork & units installed
- 4" hard pipe dryer vent to outside of home
- Electric meter can, disconnect, ground rod etc.
- A Certificate of Completion will be issued upon completion of all the above and the Specific Regulations for Residential Units.

WALTON COUNTY PLANNING AND DEVELOPMENT
303 S HAMMOND DRIVE SUITE 98
MONROE, GEORGIA 30655
Telephone (770) 267-1485 FAX 267-1407

COUNTER HOURS: 8:00 a.m. - 4:00 p.m.

Specific Regulations for Residential Units:

A minimum roof pitch of 5:12, which means having a pitch equal to at least five (5) inches of vertical height for every twelve (12) inches of horizontal run.

Land owners name:_____

Current address:_____**Phone #**_____

Construction Address:_____

Existing Structures on Property:_____

Lot #/ Subdivision/or MHPark_____

Dealers Name:_____

Contact Name:_____

Phone number:_____**Cell or Pager #**_____**Fax #**_____

Total heated space:_____

 # Bedrooms_____ **# Bathrooms**_____ **# Other Rooms**_____

Unheated garage (if attached): _____**Acreage:**_____

(All single family residential structures must have an attached or detached, enclosed, two car garage minimum 400 square feet)

{DETACHED GARAGE REQUIRES A SEPARATE PERMIT}

****Roof Pitch must be 5:12 minimum****

****All Roofs must be shingles****

Power Company _____

Gas Company_____

_____ / _____ / _____

Signature **Print name** **Date**

303 S Hammond Drive
Suite 98
Monroe, GA 30655

(770) 267-1485
(770) 267-1407 FAX
(770) 267-1485 Insp. Request

Walton County
Planning and Development

Local Government
Chapter 72 Section 36-72-4 Permit required for developing land on which cemetery located.

No known cemetery, burial ground, human remains, or burial object shall be knowingly disturbed by the owner or occupier of the land on which the cemetery or burial ground is located for the purposes of developing or changing the use of any part of such land unless a permit is first obtained from the governing authority of the municipal corporation or county wherein the cemetery or burial ground is located, which shall have authority to permit such activity except as provided in Code Section 36-72-14. (Code 1981, &36-72-4, enacted by Ga. L. 1991, p. 924, & 3.)

I _____ hereby acknowledge the receipt of copy of OCGA 36-72-4.
(Print name)

_____
(Signature)

Map/Parcel Number

WALTON COUNTY, GEORGIA
RESIDENTIAL DRIVEWAY PERMIT REQUEST

Property Owner: _____

Contact Name: _____ Phone #_____

House Permit Number: _____ $50.00 fee paid:_____

Tax Map:_____Road Name_____

Directions to property: _____

_____

_____

Subdivision and Lot Number: _____

1. Stake the location of your driveway by using the red tags given to you by the Code Office. Please call our inspection request line with your permit number (if applicable) to schedule an inspection for the culvert pipe. The inspector will go out and size the culvert pipe.

2. The exit pad must have **4"** of stone and must be a minimum of fifty (50) feet long or back to R.O.W. and fifteen (15) feet wide and silt fence must also be in place by the first inspection (earlier if necessary).

3. The culvert **MUST** be located within the right-of-way of the road; it can be tar-coated or aluminized pipe.

4. **Absolutely NO headwalls, brick mailboxes, trees or other potentially hazardous road obstruction will be allowed on the Right-of-Way.**

The finished driveway must be swailed at the Right-of-Way at the ditch to divert the water into the ditch not the road/street.

6. **Final Driveway Inspection:** Required prior to issuance of a Certificate of Occupancy of all single-family residential sites that are not a part of a curb and gutter subdivision development.

_____/_____/_____

Signature **Print name** **Date**

INSPECTOR USE ONLY

Pipe Diameter _____ inch Pipe Length _____feet

Remarks:_____

_____

Inspected By:_____ Date:_____

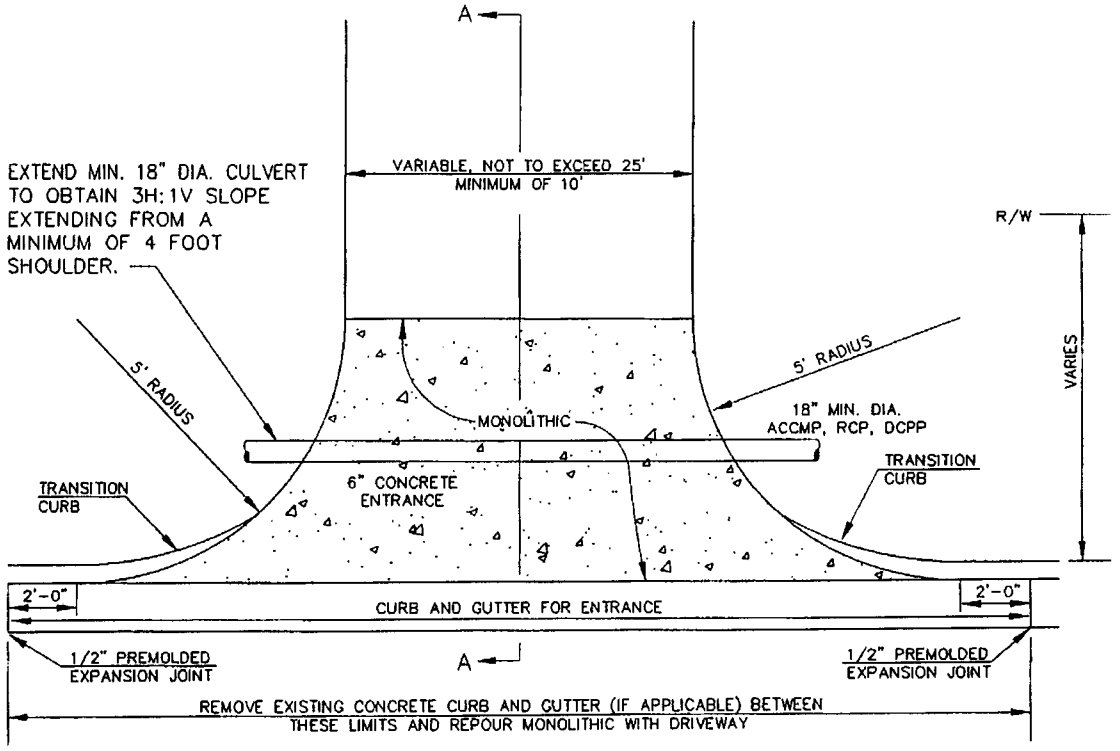

PLAN

NOTE: ALL CONCRETE TO BE 3000 PSI. MINIMUM.

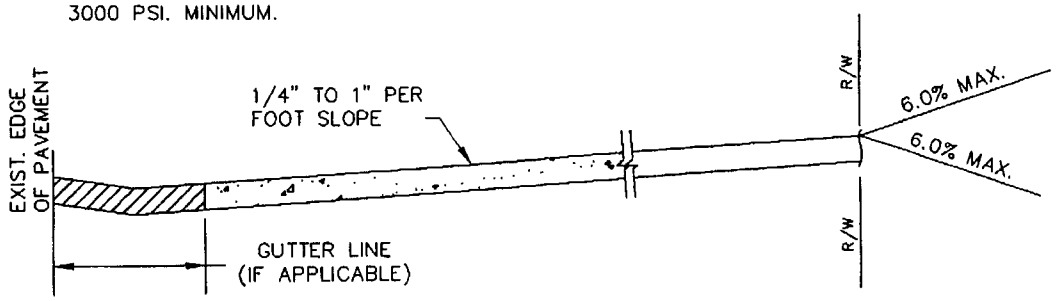

SECTION A–A

NOTE: INSTALL MIN. 18" DIAMETER CULVERT AT LOW POINT OF DRIVEWAY, AS REQUIRED BY WALTON COUNTY.

WALTON COUNTY	STANDARD DESIGN AND CONSTRUCTION DETAILS	
	RESIDENTIAL DRIVEWAY With Curb + Gutter	3.16

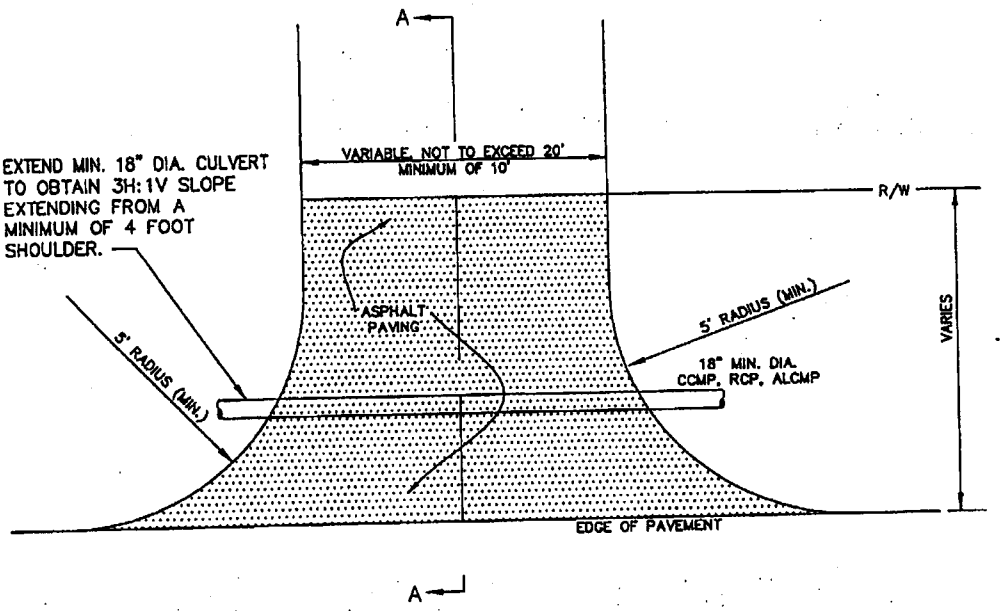

PLAN

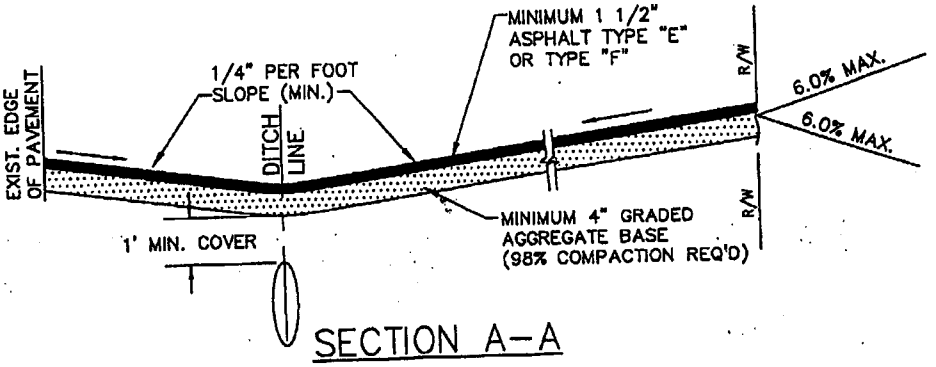

SECTION A–A

NOTES: 1. INSTALL MIN. 18" DIAMETER CULVERT AT LOW POINT OF DRIVEWAY, AS REQUIRED BY WALTON COUNTY.
2. WHERE NO DITCH LINE EXISITS, THE DRIVEWAY GRADE SHALL DROP 1/4" PER FOOT FOR A MINIMUM DISTANCE OF 12 FEET FROM THE EDGE OF PAVEMENT.

WALTON COUNTY	STANDARD DESIGN AND CONSTRUCTION DETAILS	
	RESIDENTIAL DRIVEWAY - RURAL	3.16a

WCD02CDR...y 10.01.03

CMORRIS

Walton County Planning and Development
Building Department

MANUFACTURED HOME INSTALLER AFFIDAVIT

PERMIT # DATE:

PERMIT HOLDER NAME:

JOB SITE ADDRESS:

INSTALLER:

INSTALLER PHONE NUMBER:

CONTACT NAME:

OCC. LICENSE#_____ ☐

STATE LICENSE# _____ LICENSED ☐

WALTON COUNTY CONTRACTOR# **CC** _____ ***CHECK ONE***

SIGNATURE: DATE:

NOTARY: DATE:

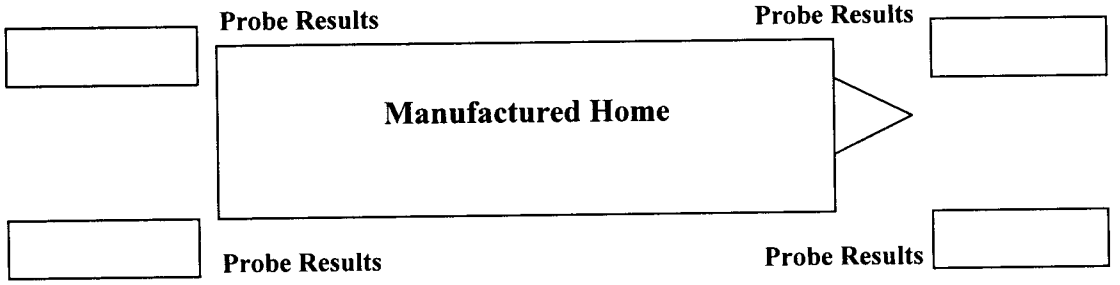

FOR ALTERNATE SETUP SYSTEMS; PROVIDE THE NAME OF SYSTEM TO BE INSTALLED AND APPROVAL CERTIFICATE FROM THE HOME MANUFACTURER FOR USE ON THEIR HOME

WALTON COUNTY PLANNING AND DEVELOPMENT

FAX (770) 267-1407 INSPECTION REQUESTS 770-267-1485 OPTION # 1

CONTRACTOR AFFIDAVIT

CONTRACTORS MUST BE REGISTERED IN WALTON COUNTY PRIOR TO SUBMITTING AFFIDAVITS

DATE: _____

Permit # _____ Address _____

Permit Name _____

Residential ____ Commercial ____

==========

ELECTRICAL:

Company/Contractor Name _____ Phone _____

Service size or Type of Installation _____

****Any Electric Permit or Addition to any One & Two Family Dwelling will require Smoke Alarms to be installed per IRC Section R 313.1-313.4.1 with Carbon Monoxide Alarms outside of each Sleeping Area. Any Service Change Will Require Intersystem Bonding Termination & Arc Fault Breakers****

Signature _____ State License # _____

Please Print Name: _____

****If Home Owner--- Signature will need to be Notarized****

Walton County Contractor #CC_____

==========

PLUMBING:

Company/Contractor Name _____ Phone _____

Number of Fixtures:

Water Closets____ Lavatory____ Tub____ Shower____Kitchen Sink____Dishwasher___

Washing Machine____ Water Heater____ Laundry Sink____ Floor Drain____

Drinking Fountain____Service Sink____ Urinal____ Disposal____ Sewer/Septic____

Other_____

By this signature, I also certify that any sprinkler systems installed for One and Two Family Dwellings are in compliance with the current enforced edition of NFPA 13D

Signature _____ State License # _____

Please Print Name: _____

****If Home Owner--- Signature will need to be Notarized****

Walton County Contractor #CC_____

WALTON COUNTY PLANNING AND DEVELOPMENT

FAX (770) 267-1407 INSPECTION REQUESTS 770-267-1485 OPTION # 1

CONTRACTOR AFFIDAVIT

CONTRACTORS MUST BE REGISTERED IN WALTON COUNTY PRIOR TO SUBMITTING AFFIDAVITS

DATE: _____

Permit #_____ Address_____

Permit Name _____

Residential _____ Commercial_____

==========

HEATING & AIR:

Company/Contractor Name_____Phone_____

Type of System _____ Tonnage _____ # of Systems_____

Signature_____ State License #_____

Please Print name_____

Walton County Contractor **#CC**_____

==========

GAS:

Company/Contractor Name_____Phone_____

Number of Items using Gas: Furnace____ Water Heater____ Stove____Dryer___

Refrigerator____ Other_____

Signature_____ State License #_____

Please Print Name_____

Walton County Contractor **#CC**_____

Walton County Mobile Home Information Sheet

Date: _____

TAX ASSESSOR

. . . . . .

Map/Parcel #_____
Ownership of Property_____
Ownership of Mobile Home: _____Phone #_____
New Location Address: _____
How many and what type structures are currently located on property?: _____
_____

Initial by: Information received by Tax Assessors Office OK! __Yes __No
**********GET COPY OF BILL OF SALE**********

_____

Homestead: _____Personal Property:_____
Type of Mobile Home for permit: Year _____ Size _____ (WxL)
Manufacture Name: _____ Model Name: _____
Serial No. _____ Total Cost: $_____
Options on Mobile Home: Roof _____ Type siding _____ Fireplace _____
Porch(size)_____Decks(size)_____ Type Heating/ Air(gas)_____ (elec)_____
Underpinning: (Blk)_____ (vinyl)_____
Is this mobile home currently located in Walton County?_____
If yes, Where and in Who's name?_____
Will there be an old mobile home traded-in or moving out of the county?_____
If yes, What type? _____ What county? _____

Mobile Home ownership signature:_____

Tax Assessors authorized signature: _____
DATE:_____

. . . . . .

TAX COMMISSIONER

<u>If you are moving a mobile home into Walton County, you MUST show proof of taxes paid in previous county.</u>

Tax Bill Number:_____ Tax Year(s): _____
Amount of Taxes Paid: $_____ Decal # _____
ALL TAX HAS BEEN COLLECTED? _____
Type of Mobile Home taxed: _____
Location address of Mobile Home where tax is paid:_____
Tax Commissioner authorized signature:_____
DATE _____